simprolit®

CALL
FOR
COOPERATION

SIMPROLIT – CALL FOR COOPERATION

Respected reader,

Introduction of various thermo-insulation systems in the contemporary civil engineering practice is caused by the major expansion of energy resource prices at the world market. As a result, there is a growing need for significant heat-loss reduction during exploitation of civil engineering structures, which as a rule could be realized using more or less effective building systems to prevent heat loss through outer walls.

Thereby, the fact that the total heat-loss of a building consists of many particular heat-losses (through each of the structural elements) is often being neglected. For a non-insulated building, which could be situated in different climate conditions, these particular heat-losses can vary between 10-20% (through floors), 25-30% (through outer walls), 25-30% (through attic slabs and roof plates) and 30-40% (through windows) of the total heat-loss.

Solving the problem of heat-loss partially - by isolating only facade walls depending on given climate conditions, brings in every case less energy saving than possible.

Therefore, the thorough and professional selection of an optimal building thermo-insulation system represents one of the most important technical and economical goals for both the Designer and the Investor.

In contemporary civil engineering practice the thermo-insulation of buildings is mostly reduced to facade walls "temperating" (together with replacement of single-layer glass windows with new double- or triple-layer "thermopan" glass windows which also have better sealing performance).

In relation to that, there is an increase in application of two-layer and three-layer facade structures consisting of bearing elements (concrete walls, brick walls) and thermo-insulation layers made of materials with the heat conductivity coefficient smaller than 0,10 W/m^{o}C (mineral wool, styrofoam panels or similar insulating materials) which are plastered or additionally coated with facade bricks or simple bricks laid sideways and then plastered.

However, the solutions including multi-layered facade walls built at the construction site also mean more working tacts, more specialists for each working position, additional expense for connections (anchors, plugs, substructures, etc.) and for various base-layers (such as special plastering over a special reinforcement mesh, using of glass or plastic fiber nets together with glue application, etc.).

All the above stated facts, together with construction complexity and working speed aspects, as well as the entire cost of the applied materials are the main reasons that the price of the facade structure plus the roof structure as "the fifth facade" has reached (depending on the climate conditions) between 15-25% of the total cost of the structure.

Also, there is usually not enough attention paid to the fact that multi-layered facade structures are made as composite sections of heterogeneous materials with different physical-mechanical properties, such as:

- expansion and shrinkage coefficients,
- compressive and tensile strengths,
- adhesion properties,
- behavior under different types of wind load (sucking, drying or abrasion effect),
- behavior under ultraviolet ray exposure,
- difference between strain values in adjacent walls with significant temperature variation due to different sun exposure and color of the final facade coating,
- difference in aging properties of each composite during exploitation,
- air and steam permeability values.

It is important to underline the fact that air and steam permeability represent not just physical-mechanical properties but also quality conditions essential for durability of facade structures as well as significant factors for energy saving and comfortable living. Facade structures must have sufficient air and steam permeability, especially if the closed areas of the building are not equipped with an adequate ventilation system. Namely, every man spends between 25-30 m^3 of air per hour and exhales 20-30 liters of carbon monoxide. Therefore, in every case of application of airtight and steam tight facade insulation, especially when combined with contemporary good quality facade carpentry, it is necessary to provide continuous ventilation in order to supply enough fresh air. However, frequent ventilation inevitably implies significant heat-loss from the building.

As a commonly accepted conclusion, also verified by the research of Dr.M.Y.Bikbey - member of the New York Academy of Civil Engineering and Russian Academy of Natural Sciences - can be stated that the only way to radical reduction of facade structure costs (and consequently total building costs) is to use one-layer facade walls, which means abandoning all types of multi-layer polymer thermo-insulation materials and technologies. Speaking at the Second International Conference on Roof Structures and Building Insulation held in Moscow (2002) he declares:
"Ideally speaking, facade structures of residential and business buildings are facing following demands:

- ability to function as bearing or self-bearing walls,
- possession of high thermo-insulation properties,
- good soundproofing,
- humidity resistance,
- frost resistance,
- air permeability,
- steam permeability,
- sufficient light-weightiness,
- ecological cleanliness,
- satisfactory fireproofing,
- durability,
- and finally, they must not obstruct the ability of architectural free expression.

Regretfully, there is no building material present which could be used for wall construction and fulfill the whole list of the above stated demands" (End of quote).

However, we have succeeded in creating such a building material. It can be used not only for construction of facade walls, but also for a whole variety of structural elements fulfilling all the above stated demands and even more: it is suitable for different climate conditions, various humidity degrees and 24-hour extreme temperature changes!

This new material is «Simprolit ® » - our patented "super-light" polystyrene concrete (or "Wonder-material of the 21st century" as they call it in the Center for implementation and application of new technologies in Moscow) and elements produced using this material.

Walls made of Simprolit blocks with just 30 cm thickness are recommended by the "Russian Academy of Civil Engineering Science - Institute of Civil Engineering Physics" for use as one-layer facade walls in all climate zones of the Russian Federation, including climate regions at the Far East and Siberia. In those extreme climate conditions Simprolit is used without additional insulation layers (just Simprolit blocks with thin plaster coating and finishing paint), which drastically reduces the overall costs of the structures.

At "the end of the World" - in Chukotka - only a couple hundred kilometers away from Alaska, the new Anadir airport terminal is being built using Simprolit blocks and Simprolit monolith for slabs and roof plates. At the same time and at the same place, the designing of the whole residential area is in progress, which proves that Simprolit has not only excellent thermo-technical properties, but also a mobile production technology - in the land of eternal ice, polar bears and seals, where nothing has ever been manufactured and everything is brought by ship during summer and by cargo-planes during winter period - in less then a month approximately 1000 m^3 of Simprolit blocks has been produced.

Let us introduce you to some properties of Simprolit polystyrene concrete and structural elements made of this material.

The structure of Simprolit monolith

SIMPROLIT

Simprolit® – is a commercial name for a patent-protected light polystyrene concrete based on aggregate made of expanded polystyrene (styrofoam) granules. Application of polystyrene concrete in Civil engineering is not a new concept - in fact it is several decades old. Namely, expanded polystyrene was found in 1951 and his application in light concrete production began soon after that.

Simprolit is made of Portland cement, expanded polystyrene granules, water and special additives. The expanding process of the raw material is very simple - it occurs when polystyrene balls are subjected to hot water (temperature 98°C) or steam (temperature 90-110°C). The density of the produced material can vary between 10-40 kg/m^3. Expanded polystyrene used for production of **Simprolit®** usually has granules with density between 10-15 kg/m^3.

The thing that makes **Simprolit®** exceptional and different from other materials in the group of polystyrene concretes is its low density, low water absorption and capillary spreading, high frost resistance, stability of physical-mechanical characteristics not depending on the moisture content and optimal correlation between its strength and heat conductivity.

Namely, **Simprolit®** is characterized by relatively low density (150-300 kg/m^3) and very low heat conductivity coefficient in dry condition (0,055-0,085 W/m·°C), which practically does not depend on the moisture content. Steam permeability ranges between 0,110-0,135 mg/m·h·Pa, which gives the opportunity to the walls made of **Simprolit®** to "breathe" normally. This material also possesses good soundproofing properties. For example, it is possible to reduce noise level up to 40 dB depending on the composite thickness.

High frost resistance also characterizes **Simprolit®**. Experiments show that at 50-cycle freeze-thaw test (from +15°C to -20°C), loss of strength varies only from 1,5% - 1,8%. This material is also ecologically suitable - the lab tests have shown that its composite toxicity indicator is about 2 - 10 times lower than values approved by the referent standards.

Simprolit® is also highly bio-resistant to all kinds of insects and different types of plant and animal bacteria.

When exposed to fire, polystyrene granules vaporize, and in prolonged high temperatures the material turns into cement stone, with no smoke or flame appearing. **Simprolit®** polystyrene concrete is **non-flammable** material that belongs to the flammability class **NG**. Depending on designed and applied type of additional thermo-insulation fitting, structures made of **Simprolit®** may be placed in the flammability group from G1 to NG.

Simprolit® elements give us the opportunity to make significant savings not only during building of industrial, residential, sports, rural and other structures, but also during their future exploitation.

Simprolit® elements can also considerably improve thermo-insulation properties of already built, i.e. existing structures.

Simprolit® polystyrene concrete can also be casted on the construction site as

-**SIMPROLIT MONOLITH** – for insulation of roofs covered with corrugated metal sheets; for flat roofs, functioning simultaneously as a thermo-insulation, as a basis for waterproofing layer and finally as a slope-layer; for floors serving as insulation material and slab leveling material (instead of cement screeds) on the top of which any type of designed flooring could be directly placed; for casting of walls, slabs, roof plates, vaults, etc.

However, the main advantages can be achieved through application of prefabricated structural elements based on **Simprolit®**, such as:

SUP, SOP	- Simprolit panels for facade thermo-insulation;
SB, SBS	- Simprolit blocks for outer walls;
SPB, SPBS	- Simprolit blocks for facade casing and partition walls;
SMP, SMPP	- Simprolit slabs;
SKP, SKPP	- Simprolit roof plates;
SPP, SPPS	- Simprolit panels for prefabricated partitions;
SIP	- Simprolit insulation panels for floors and kitchen/bathrooms;
SPP	- Simprolit fire-resistant partitions;
SFE	- Simprolit prefabricated facade elements (balusters, crowns, etc.).

SIMPROLIT PLATES

Simprolit plates are part of the **Simprolit system** for facade thermo-insulation. There are two types of these plates: Simprolit three-layer plates (**SUP**n) and Simprolit one-layer plates (**SOP**n) where "n" stands for thickness of a plate expressed in centimeters.

Comparing thermical properties "ΣK" (Heat transfer coefficient) and "R" (Heat transfer resistance coefficient) of Simprolit plate with the same characteristics of standard full-brick wall, the conclusion can be derived that 31 cm thick brick wall can be replaced with 3 cm (SUP3) Simprolit plate, and 218 cm thick brick wall can be replaced with 15 cm (SUP15) Simprolit plate

Basic property and advantage of Simprolit system in comparison with other thermo-insulation systems (except for the very expensive ventilated-facade system) is its steam permeability. Among other advantages, one must underline that with Simprolit system there is no condensation effect - which is a fact that has direct influence on insulated facade durability.

Besides, as a distinction from the Styrofoam facade insulation system ("Demit" and other similar systems) where fireproofing joints are made of mineral wool (which is regarded as one of the main reasons for later crack appearance on the junction between two heterogeneous materials), Simprolit system is characterized by the fact that its fireproofing joints are made of the same material as the insulation plates - of non-flammable Simprolit polystyrene concrete.

The properties of Simprolit plates are given in Enclosure 1 of this text, whereas the dimensions and prices can be found in Enclosure 2.

SIMPROLIT BLOCKS

By their relation between: **quality - low heat conductivity - durability - good soundproofing - good waterproofing - small weight of structure - ecological suitability - cost-effectiveness**, **Simprolit** blocks have no alternative among similar products at the world market. Walls made of **Simprolit** blocks possess high thermo-insulation properties, but they also have soundproofing and structural qualities, keeping the same characteristics for a very long period of exploitation (100 and more years).

Extraordinary thermo-physical characteristics of **Simprolit** blocks give us the opportunity to build even in extreme climate conditions of Russian Federation (for instance in Siberia's polar regions at the far east) without any additional measures for facade insulation (in Anadir-Chukotka, only couple of hundred kilometers away from Alaska, with average winter temperature of -46^{0}C, buildings at the local airport are constructed using 30 cm thick Simprolit blocks). **Simprolit** blocks can be applied either independently, as a facade thermo-insulation system for building construction, or as a permanent thermical formwork for structural and seismic-resistant walls.

Simprolit blocks have excellent ecological (sanitary-epidemiological) properties, which are a whole class higher than values required by the GOST R 51263-99 standard. Buildings made with Simprolit blocks are not just very comfortable to live in (according to GOST 30494-96), but also ecologically suitable (according to GOST 30775-2011 and GOST R 51769-2001).

Thanks to their structural properties (vertical hollow spaces within blocks that can be filled with fresh concrete, but also with prefabricated concrete elements, styrofoam, Simprolit polystyrene concrete, etc.) building with **Simprolit** blocks can be done using "dry installation", a method which could be essential for building under hard winter conditions. Talking about structural properties, one must also mention existence of hollow spaces on the upper surface of **Simprolit** blocks, which allow fitment of steel reinforcement and filling up of these cavities with monolith concrete. This reinforcement, together with vertical concrete pillars made by filling the holes with concrete up to the full height of the wall, forms a reinforced concrete truss - thus significantly increasing the resistance of the wall itself and the whole structure, especially when the building takes place in active seismic regions. Among other equally important structural and thermo-physical properties, **Simprolit** blocks are characterized by a specific frontal surface whose configuration stops air blowing and prevents freezing of vertical joints.

In calculation and design, **Simprolit** blocks must always be treated only as thermo-insulating elements and walls made of these blocks only as self-supporting walls. It is strictly forbidden to rely on such walls built without concrete filling to be bearing elements in the structural system of the building, regardless of the lab tests showing that **Simprolit** blocks have certain bearing capacity. Namely, **solely the quality and the class of concrete filling the hollow block spaces must define bearing capacity of Simprolit walls**. On the other hand, **Simprolit** blocks filled with concrete (satisfying the designed class) and reinforced with horizontal bars (∅ 8mm) put in every fourth row of the blocks, represent by far the most stable system (when exposed to vertical or horizontal seismic load) in comparison with other known systems.

There are various types and classes of **Simprolit** blocks, but all of them are made using special patented admixtures for polystyrene concrete providing exquisite thermo-physical properties, good waterproofing characteristics and durability.

Simprolit blocks are easy to adapt (by cutting, drilling or slitting) giving us wide possibilities to apply them in any given structural system.

Light-weightiness of the material, fast and simple construction, lack of classic formwork for window and door lintels, walls without cold thermic "bridges", higher seismic resistance, waterproofing and bio-resistance characterize building with **Simprolit** blocks.

Plastering or just skimming of facade or inner walls goes without any difficulties because of the excellent adhesion between plaster and rough surface of the blocks. Walls may be plaster coated with a thin plaster layer (6-10 mm), or skimmed with cement slurry mixed with fine sand or only skimmed with ceramic tile glue. After that, any of the materials defined by the Designer may be used as a finishing layer.

It must be underlined that **Simprolit** blocks have practically no real rival on the market in case of adaptation of existing structures or additional building of attics on the top of flat-roof structures. Thanks to the light-weightiness of **Simprolit** the total load of the adapted or additionally built part of the structure is smaller than the weight of all layers of a conventional flat roof - so there is no need for any foundation strengthening.

Also, exceptional light-weightiness of **Simprolit** blocks together with simple and fast construction method makes it possible to perform the adaptation without moving out the tenants of the adapted building, which often represents a large difficulty for other similar methods using light-weight materials and prefabricated metal or concrete bearing elements.

SIMPROLIT PARTITION BLOCKS

Among structural elements used for partition wall construction **Simprolit** partition panels and **Simprolit** partition blocks have distinctive position and practically no real alternative compared with similar products because of their relation between: **quality - low heat conductivity - high summer stability - good soundproofing - good waterproofing - strength - small weight of structure - price.** This is especially evident in the case of building bathroom, toilet or kitchen partition walls including plumbing. Namely, walls made of Simprolit blocks are declared as "dry walls" (with less than 4% humidity). In case of plumbing damage and excessive water flow, wet structure dries quickly without permanent loss of physical properties.

When exposed to flood, walls made with Simprolit blocks do not absorb water capillary the way that brick, Siporex, gas concrete, expanded clay concrete or gypsum cardboard walls do. Walls made of these other materials absorb water all along their height and afterwards it takes a long period of time for them to dry (sometimes more than a year) or they simply swell and fall apart. On the other hand, level of water absorbed by Simprolit blocks is just 3-4 cm higher than the flood level and after the removal of the excess water Simprolit block walls dry very quickly which is a fact that has been certified by the lab tests conducted at the Institute for materials and structures - Faculty of Civil engineering in Belgrade.

Having specific configuration and hollow spaces suitable for installation of reinforcement bars, **Simprolit** partition blocks are ideal for construction of very light but also very safe **anti-burglary walls** for protection of especially important rooms and buildings.

Basic thickness of partition blocks is 12 cm. However, upon special request and in accordance with Technical conditions, **Simprolit** blocks can also be manufactured in other thicknesses such as 8 cm or 15 cm.

The properties of **Simprolit** blocks, their dimensions, forms and prices, together with price-list of the material needed for **Simprolit** partition wall construction can be found in Enclosures 3-7.

ADVANTAGES IN APPLICATION OF SIMPROLIT BLOCKS IN CIVIL ENGINEERING

Cost-effectiveness in application of Simprolit blocks in Civil engineering - it is the most interesting issue for the Investor. Without getting into all the inferior physical, thermo-technical and ecological properties (not to mention the poor durability) of the usually applied facade structures (bricks or Siporex insulated with mineral wool or Styrofoam and coated with mineral polymer-cement plaster over glass-fiber net or simply protected with facade bricks), let us analyze the indisputable cost-effectiveness, even possible profit for the Investor calculated per meter of a facade wall built using Simprolit blocks.

Before we start the analysis, let us make another approximation that will be on the safe side - although thermo-insulation characteristics of 12 cm thick Simprolit blocks (types «SPB50», «SPB60», «SPBS60», «SPBS90») are totally satisfactory even in our hardest climate conditions, we can assume that the Investor uses 20 cm thick blocks (types «SBS20», «SBDS20») to build the outer walls. Let's get a closer look at the most commonly used outer-wall building systems:

1. Siporex blocks d=25cm, air space 3cm, full brick 12cm, inner plaster 3cm, outer plaster 2cm .....total thickness 45cm.
2. Bearing brick blocks d=20cm, styrofoam 3cm, air space 2cm, full brick 12cm, inner plaster 3cm, outer plaster 2cm ..... total thickness 42cm.
3. Siporex or bearing brick blocks d=25cm, air space 1cm, styrofoam 3cm, inner plaster 3cm, outer plaster 1.5cm ..... total thickness 37,5cm.

Without getting into elaborate economic cost-analysis of the above mentioned multi-layer walls, let's make a note that the minimal thickness of these walls amounts to 37.5 cm. Instead of that, we can use 20 cm thick Simprolit blocks and reduce the total thickness of the same walls to 22.5 cm (Simprolit block 20cm, inner plaster 1.5cm and outer plaster max. 1.0cm). The difference between two thicknesses amounts to 37,5-22,5=15 cm, i.e. 0,15 m^2 per meter of the wall.

Price of the material, together with concrete filling and reinforcement in every third row, amounts to approximately 18 Euro/m^2 of a Simprolit facade wall, i.e. for a given floor-height of 3.0m price of the material amounts to 3x18=54 Euro/m^l of a Simprolit facade wall.

If we assume that the ground costs 500 Euro/m^2 (and it costs considerably more!), the Investor gains additional 0,15x500=75 Euro per meter of a Simprolit facade wall. When he pays for the material (54 Euro/m^l) and for the manual labor (15-16 Euro/m^l) he comes to the final conclusion:

BY BUILDING FACADE WALLS WITH SIMPROLIT BLOCKS
THE INVESTOR GETS THESE WALLS ABSOLUTELY FREE !

and even makes an additional income of 5-6 Euro per every meter of the constructed wall.

GRATIS WALLS + ADDITIONAL INCOME
IT CAN'T GET ANY CHEAPER !

In addition to the above stated facts, the total economy of the Investor is also influenced by other advantages of Simprolit blocks' application, and especially by their

- maximum light-weightiness:

no matter that building with Simprolit blocks requires concrete filling, the total weight of a Simprolit wall is by far smaller than the correspondent weight of a classic wall.
For instance, 22.5 cm thick outer wall made of Simprolit blocks (Simprolit block 20 cm, inner plaster layer 1.5 cm and outer plaster layer 1.0 cm) together with plaster and concrete weighs 165 kg/m^2 of the wall (just Simprolit blocks weigh around 3.1 kg/piece, or less than 27.5 kg/m^2 of the wall). Partition wall made of 14 cm thick Simprolit partition blocks (Simprolit block 12 cm, inner and outer plaster layer 1.0 cm each) together with plaster and concrete weighs 121 kg/m^2 of the wall (just Simprolit blocks weigh less than 2 kg/piece, or less than 20 kg/m^2 of the wall).

Comparing the weight of a plastered facade wall made of 20 cm thick Simprolit blocks (121 kg/m^2) with the weight of a plastered partition wall made of 12 cm thick clay bricks (296 kg/m^2) it is obvious that Simprolit walls have exceptional light-weightiness. Also, concrete poured into the gaps of Simprolit blocks helps to improve other important properties of the wall, such as soundproofing, summer stability, heat capacity, etc.).

Significantly smaller weight of walls, slabs and roof plates made of Simprolit also means foundations, bearing columns and beams with smaller dimensions, lesser ground-pressure and settlement of the structure, smaller seismic mass and consequently smaller seismic load of the structure, etc. Also, all these things directly imply smaller investments required per m^2 of the structure.
The importance of material light-weightiness is essential in case of adaptation of existing structures or additional building of attics on the top of flat-roof structures. In such a case, the total load of the adapted or additionally built part of the structure is smaller than the weight of all layers of a conventional flat roof that are being removed in the adaptation process - so there is no need for any foundation strengthening. For instance, if the calculation shows that it is possible to add two extra stories to the existing structure using other materials, it can also be shown that with Simprolit it is possible to build three stories keeping the same weight of the additional structure. Also, the light-weightiness of Simprolit blocks together with simple and fast construction method makes it possible to perform the adaptation without moving out the tenants of the adapted building, which often represents a large difficulty for other similar methods using light-weight materials and prefabricated metal or concrete bearing elements.

The fact to be particularly underlined is that Simprolit blocks have no real competition in their category when it comes to building rooms subjected to increased humidity - such as kitchen or bathroom walls including plumbing. Therefore, more and more often Investors and Contractors specialized for installation of light-weight gypsum cardboard partition walls insulated with mineral wool are starting to use Simprolit partition blocks for kitchen and bathroom walls (so called waterproof gypsum-cardboard plates are in fact waterproof just on the surface and in time due to steam and humidity penetration they swell, disintegrate and fall apart, especially at places in contact with plumbing pipes and installations).

Together with the above-mentioned advantages (light-weightiness and cost-effectiveness), Simprolit blocks and Simprolit building system also have other favorable characteristics, which distinguish Simprolit from similar materials and building systems available at the market. Let us introduce you to some of these characteristics:

- simple horizontal and vertical transport;
- excellent workability;
- simple construction (there is no need for high-qualified labor);
- vertical and horizontal joints without thermic "bridges" (blocks are laid without plaster or glue);
- thick plaster layer is not necessary;
- low water absorption and good waterproofing;
- contains no lime or any other aggressive substance;
- constant humidity percentage: 4-8% ;
- very good relation between heat conductivity coefficient for material in dry conditions and the same coefficient for elements already built in the wall;
- good ductility and deformation resistance of the blocks;
- simply the best summer stability in comparison with other materials with the same thickness;
- remarkably good steam-conductivity (walls made of SIMPROLIT can "breathe");
- fulfillment of fireproofing requirements;
- possible application as a permanent thermo-insulating formwork;
- comfortability;
- ecological suitability;
- large assortment of different elements made of Simprolit;
- durability;
- frost-resistance;
- stability under intense daily temperature changes;
- and many other advantages!

WE HOPE THAT YOU GOT INTERESTED IN OUR PRODUCTS AND THAT YOU WILL FIND SOME TIME TO GET MORE DETAILS FROM OUR PRESENTATION AVAILABLE ON CD OR AT THE WEB SITE

www.simprolit.com

LOOKING FORWARD TO OUR FUTURE SUCCESSFUL COOPERATION
WE WILL BE GLAD TO CONSIDER ALL YOUR SUGGESTIONS!

With respect,

DTech **Milan Devic**, B.Sc.C.E.
Ph.D of Technology and Engineering in Civil Engineering

TABLE OF SIMPROLIT PRODUCTS

Table containing Heat transfer coefficient "K" and Heat transfer resistance coefficient "R" with comparative analysis of equivalent coefficients of full brick and bearing brick

SIMPROLIT PLATES SUP (THREE-LAYERS)

Simprolit SUP3 (1 cm. + 1 cm. + 1 cm.) = 3 cm.	K=1.544 W/m²C° R=0.648 m²C°/W	3 cm.	31 cm.	25 cm.
			10.33 x	8.33 x
Simprolit SUP5 (1 cm. + 3 cm. + 1 cm.) = 5 cm.	K=0.881 W/m²C° R=1.136 m²C°/W	5 cm.	62 cm.	51 cm.
			12.40 x	10.20 x
Simprolit SUP8 (1 cm. + 6 cm. + 1 cm.) = 8 cm.	K=0.536 W/m²C° R=1.867 m²C°/W	8 cm.	109 cm.	89 cm.
			13.63 x	11.13 x
Simprolit SUP10 (1 cm. + 8 cm. + 1 cm.) = 10 cm.	K=0.425 W/m²C° R=2.355 m²C°/W	10 cm.	140 cm.	114 cm.
			14.00 x	11.4 x
Simprolit SUP12 (1 cm. + 10 cm. + 1 cm.) = 12 cm.	K=0.352 W/m²C° R=2.843 m²C°/W	12 cm.	172 cm.	139 cm.
			14.33 x	11.58 x
Simprolit SUP15 (1 cm. + 13 cm. + 1 cm.) = 15 cm.	K=0.280 W/m²C° R=3.575 m²C°/W	15 cm.	218 cm.	177 cm.
			14.53 x	11.80 x

SIMPROLIT PLATES SOP (ONE-LAYER)

Simprolit SOP3	K=1.840 W/m²C° R=0.544 m²C°/W	3 cm.	24 cm.	20 cm.
			8.00 x	6.67 x
Simprolit SOP5	K=1.260 W/m²C° R=0.794 m²C°/W	5 cm.	41 cm.	33 cm.
			8.00 x	6.60 x
Simprolit SOP8	K=0.856 W/m²C° R=1.169 m²C°/W	8 cm.	64 cm.	52 cm.
			8.00 x	6.50 x
Simprolit SOP10	K=0.705 W/m²C° R=1.419 m²C°/W	10 cm.	80 cm.	65 cm.
			8.00 x	6.50 x
Simprolit SOP12	K=0.599 W/m²C° R=1.669 m²C°/W	12 cm.	97 cm.	79 cm.
			8.08 x	6.58 x 6.58 x
Simprolit SOP15	K=0.489 W/m²C° R=2.044 m²C°/W	15 cm.	121 cm.	98 cm.
			8.07 x 8.07 x	6.53 6.53 x

* SIMPROLIT | FULL BRICK | BEARING BRICK

SIMPROLIT ONE-LAYER (SOP) AND THREE-LAYER (SUP) PLATES

Enclosure 2.

N°	Type of product	Dimensions (cm)	Heat transfer resistance coefficient "R"	Equivalent full brick wall thickness	Equivalent hollow brick (block) wall thickness	Price of the plate $/piece in Russia	Price of the plate $/m^2 in Russia
1.	One-layer Simprolit plate **SOP 3**	75 x 100 x 3	0,714	24	20	5,25	**7,0**
2.	One-layer Simprolit plate **SOP 5**	75 x 100 x 5	0,964	41	33	6,00	**8,0**
3.	One-layer Simprolit plate **SOP 8**	75 x 100 x 8	1,339	64	52	7,50	**10,0**
4.	One-layer Simprolit plate **SOP 10**	75 x 100 x 10	1,590	80	65	9,00	**12,0**
5.	One-layer Simprolit plate **SOP 12**	75 x 100 x 12	1,839	97	79	9,75	**13,0**
6.	One-layer Simprolit plate **SOP 15**	75 x 100 x 15	2,214	121	98	11,25	**15,0**
7.	Three-layer Simprolit plate **SUP 3**	75 x 100 x 3	0,818	31	25	4,50	**6,0**
8.	Three-layer Simprolit plate **SUP 5**	75 x 100 x 5	1,306	62	51	5,25	**7,0**
9.	Three-layer Simprolit plate **SUP 8**	75 x 100 x 8	2,037	109	89	6,00	**8,0**
10.	Three-layer Simprolit plate **SUP 10**	75 x 100 x 10	2,525	140	114	6,75	**9,0**
11.	Three-layer Simprolit plate **SUP 12**	75 x 100 x 12	3,013	172	139	7,50	**10,0**
12.	Three-layer Simprolit plate **SUP 15**	75 x 100 x 15	3,745	218	177	9,00	**12,0**

№	**Enclosure 3.** **Block types**		Weight of the wall without and with concrete + plaster on both sides of the block [kg/m^2]		Heat transfer resistance coefficient $R^{тр}_0$ [m$^{2.}$ ^{0}C/Wt]		Equivalent full brick wall thickness [cm]		Equivalent hollow brick (block) wall thickness [cm]		Price of blocks per m^2 of the wall	Max. price of material per m^2 (concrete+ reinforcement+ 2-sided plastering)
	Description	**Drawing**	min	max	max	min	max	min	max	min	$ / m^2	$ / m^2
1	***SB 25*** Simprolit building block with various filling	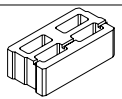	31	183	4,07	2,55	249	152	203	124	19,0	22,60
2	***SBD 25*** Simprolit building block with various filling	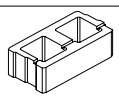	29	288	4,31	1,87	265	109	215	89	19,0	27,95
3	***SBS 25*** Simprolit building block with various filling	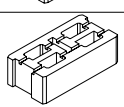	41	164	4,09	2,84	251	171	204	139	19,0	22,55
4	***SBDS 25*** Simprolit building block with various filling	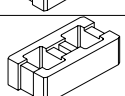	30	269	4,31	2,20	265	130	215	106	19,0	27,90
5	***SBS 20*** Simprolit building block with various filling	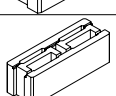	27	165	3,24	2,49	161	121	198	179	15,0	18,90
6	***SBDS 20*** Simprolit building block with various filling	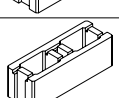	21	256	3,48	1,73	172	81	212	100	15,0	20,80
7	***SPB 50*** Simprolit building block with various filling	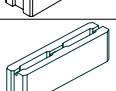	18	128	1,88	1,57	110	90	89	73	9,0	11,10
8	***SPBS 90*** Simprolit building block with various filling	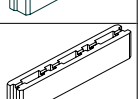	17	116	1,96	1,53	114	87	93	71	9,0	11,50

Enclosure 4.

Block type	SB25	SBD25	SB30	SBD30	SBS20	SBDS20	SBS25	SBDS25	SBS30	SBDS30	SPBS90	SPB60	SPBS60	SB8k	SB8r
Drawing															
(length) l [см]	50	50	60	60	60	60	50	50	60	60	90	60	60	60	60
(thickness) d [см]	25	25	30	30	20	20	25	25	30	30	12	12	12	8	8
(height) h [см]	19	19	19	19	19	19	19	19	19	19	19	19	19	19	19
V netto of a block [cm^3/piece]	14664	13832	21288	17698	15256	12104	15446	13675	23056	20448	14624	10229	9724	8616	8672
V of concrete per block [cm^3/piece]	4180	8816	6004	15124	4332	9310	3287	7999	4522	11324	4275	3040	2850	504	448
Q netto of a block [kg/piece]	2.9	2.8	4.3	3.5	3.1	2.4	3.1	2.7	4.6	4.1	2.9	2.0	1.9	1.7	1.7
N [pieces/m^3 of wall]	42.1	42.1	29.2	29.2	43.9	43.9	42.1	42.1	29.2	29.2	48.7	73.1	73.1	109.6	109.6
n [pieces/m^2 of wall]	10.5	10.5	8.8	8.8	8.8	8.8	10.5	10.5	8.8	8.8	5.8	8.8	8.8	8.8	8.8
Vb [concrete vol. - in m^3/m^2 of the wall]	0.044	0.093	0.053	0.133	0.038	0.082	0.035	0.084	0.040	0.099	0.025	0.027	0.025	0.004	0.004
q` [concrete load - in kg/m^2 of the wall]	97	204	116	292	84	180	76	185	87	219	55	59	55	10	9
q`` [block+concrete load - in kg/m^2]	128	233	153	323	110	201	109	214	128	254	72	77	72	25	24
Q [with plaster and concrete - in kg/m^2]	183	288	208	378	165	256	164	269	183	309	116	121	116	69	68
Drawing															

Block type	SB25	SBD25	SB30	SBD30	SBS20	SBDS20	SBS25	SBDS25	SBS30	SBDS30	SPBS90	SPB60	SPBS60	SB8k	SB8r
Drawing															
Price of Simprolit blocks in $/m^2 of the wall	18.75	18.75	**22.50**	22.50	15.00	15.00	18.75	18.75	**22.50**	22.50	9.00	**9.00**	9.00	6.00	6.00
Price of concrete - Class 20 without anti-freeze admixture in $/m^2 of the wall	2.55	5.38	3.05	7.69	2.20	4.74	2.01	4.88	2.30	5.76	1.45	1.55	1.45	0.26	0.23
Price of concrete - Class 20 with anti-freeze admixture in $/m^2 of the wall	2.76	5.82	3.30	8.31	2.38	5.12	2.17	5.28	2.49	6.22	1.57	1.67	1.57	0.28	0.25
Price of concrete - Class 30 without anti-freeze admixture in $/m^2 of the wall	2.79	5.88	3.34	8.40	2.41	5.17	2.19	5.33	2.51	6.29	1.58	1.69	1.58	0.28	0.25
Price of concrete - Class 30 with anti-freeze admixture in $/m^2 of the wall	2.96	6.25	3.55	8.93	2.56	5.50	2.33	5.67	2.67	6.69	1.68	1.80	1.68	0.30	0.26
Price of Simprolit blocks+concrete (Class 20)+reinforcement ∅ 8/57 in $/m^2 of the wall	21.60	24.43	25.85	30.49	17.50	20.04	21.06	23.93	25.10	28.56	10.75	10.85	10.75	6.56	6.53
Price of Simprolit blocks+concrete (Class 20, frost-resistant)+reinforcement ∅ 8/57 in $/m^2 of the wall	21.81	24.87	26.10	31.11	17.68	20.42	21.22	24.33	25.29	29.02	10.87	10.97	10.87	6.58	6.55
Price of Simprolit blocks+concrete (Class 30)+reinforcement ∅ 8/57 in $/m^2 of the wall	21.84	24.93	26.14	31.20	17.71	20.47	21.24	24.38	25.31	29.09	10.88	10.99	10.88	6.58	6.55
Price of Simprolit blocks+concrete (Class 30, frost-resistant)+reinforcement ∅ 8/57 in $/m^2 of the wall =$/м2 zida	22.01	25.30	26.35	31.73	17.86	20.80	21.38	24.72	25.47	29.49	10.98	11.10	10.98	6.60	6.56
Maximum price per m^2 of the wall (in Russia) in $/m^2 of the wall	22.60	27.95	26.35	31.73	18.90	20.80	22.55	27.90	25.47	29.49	10.98	11.10	11.10	6.60	6.56
Drawing															

Enclosure 6.

TYPES OF SIMPROLIT BLOCKS

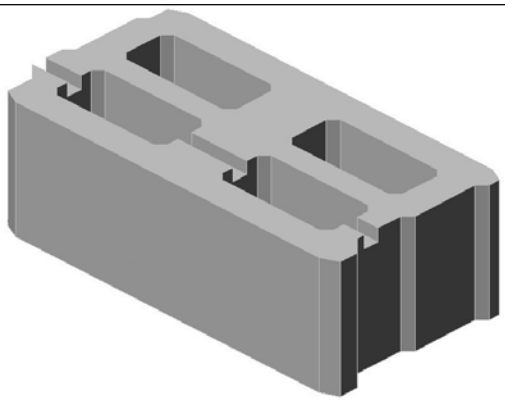 **SB25** (50x25x19)	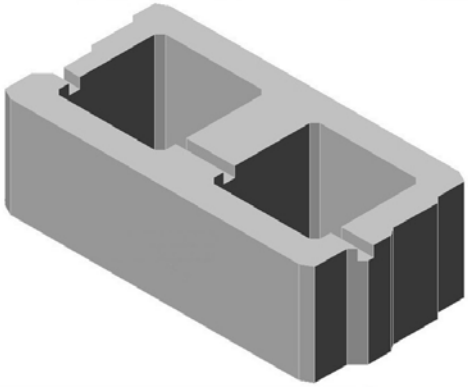 **SBD25** (50x25x19)
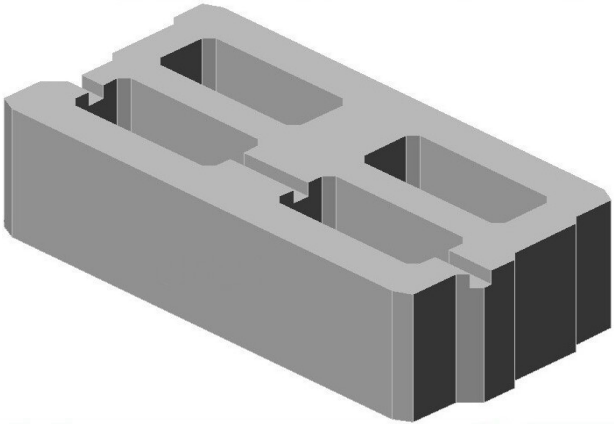 **SB30** (60x30x19)	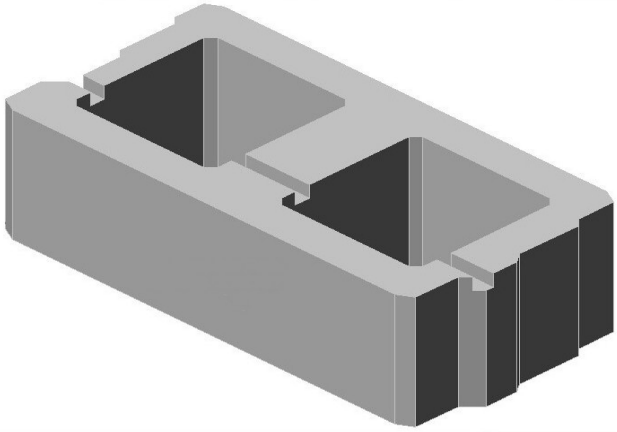 **SBD30** (60x30x19)
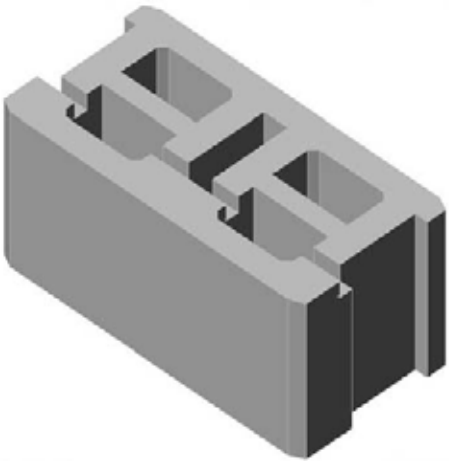 **SBS25** (50x25x19)	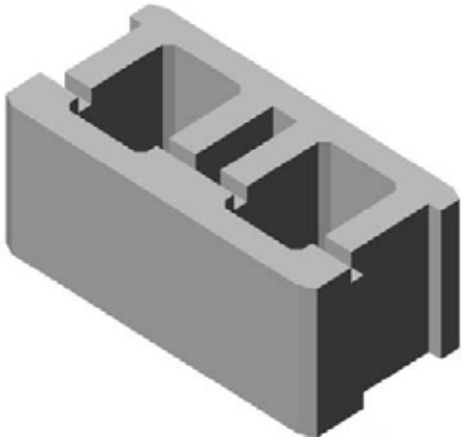 **SBDS25** (50x25x19)

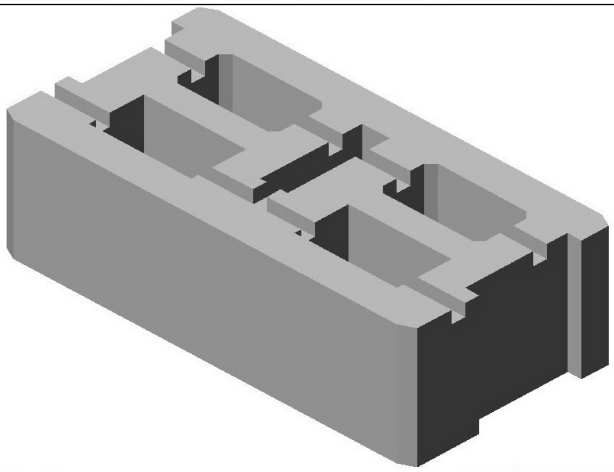 **SBS30** (60x30x19)	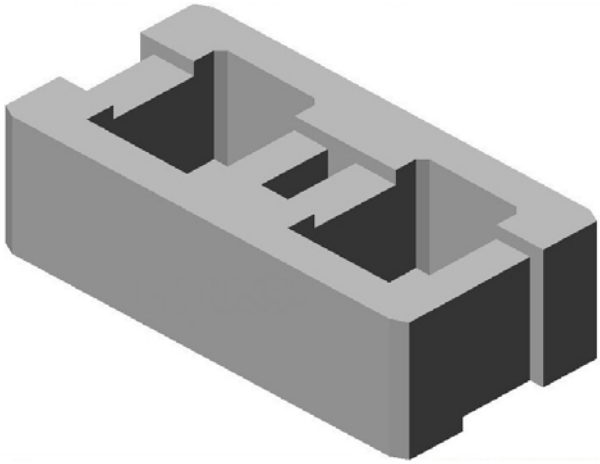 **SBDS30** (60x30x19)
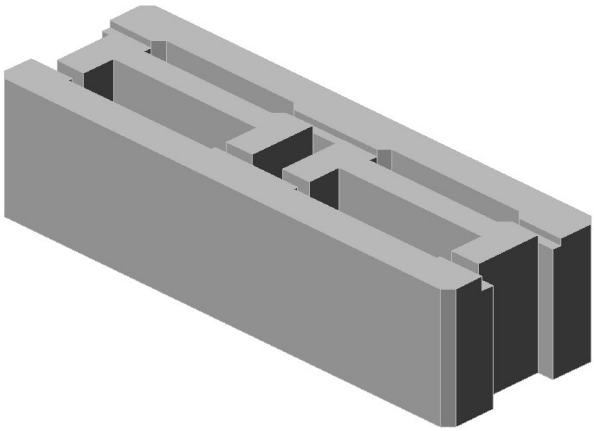 **SBS20** (60x20x19)	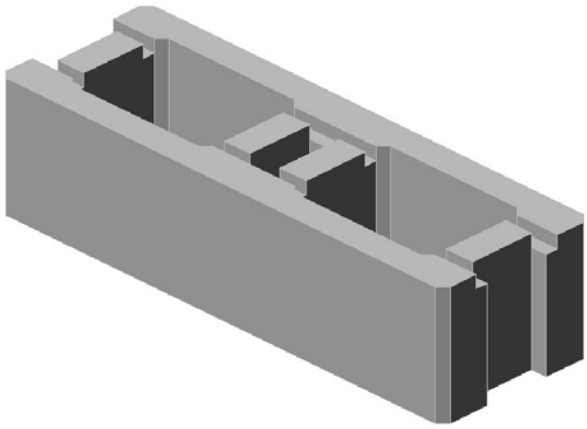 **SBDS20** (60x20x19)
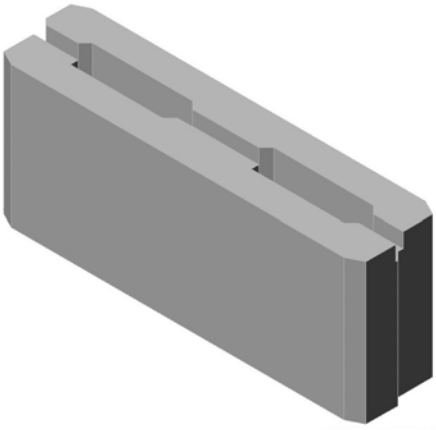 **SPB50** (50x12x19)	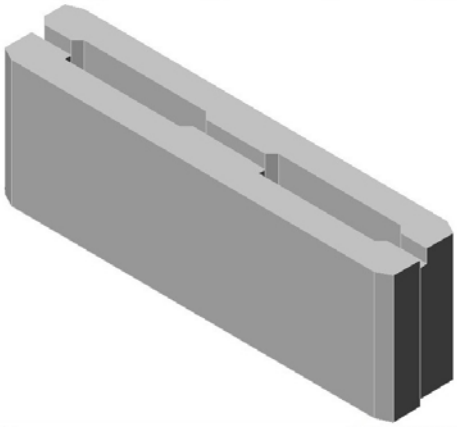 **SPB60** (60x12x19)

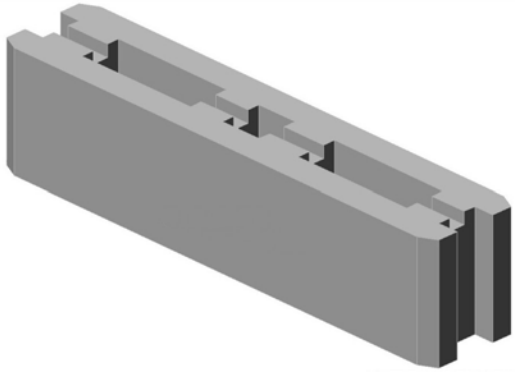

SPBS60 (60x12x19)

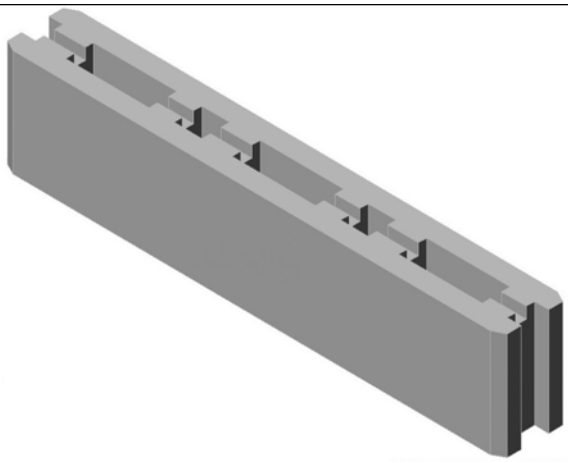

SPBS90 (90x12x19)

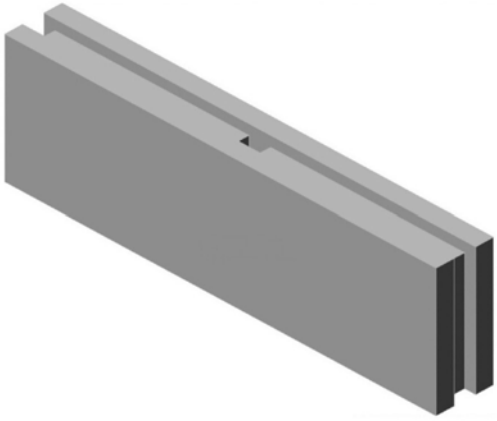

SB8k (60x8x19)

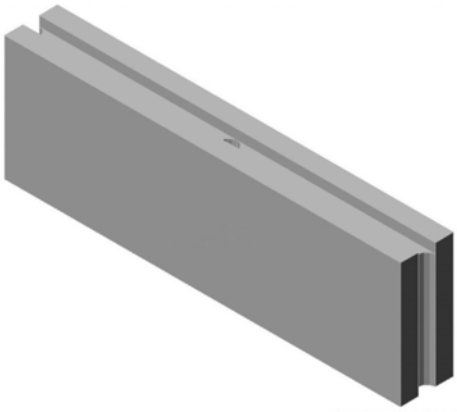

SB8r (60x8x19)

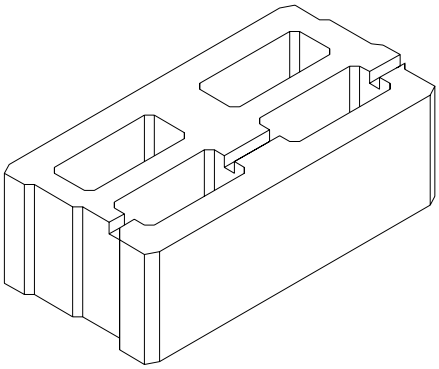

SB30v (600x300x225) – for Russian market

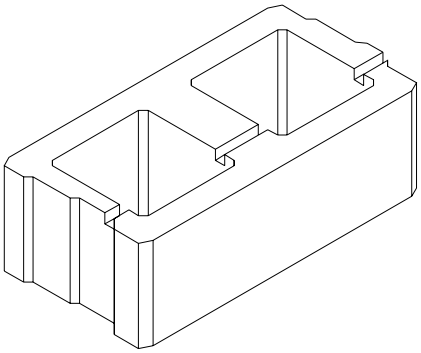

SBD30v (600x300x225) – for Russ. market

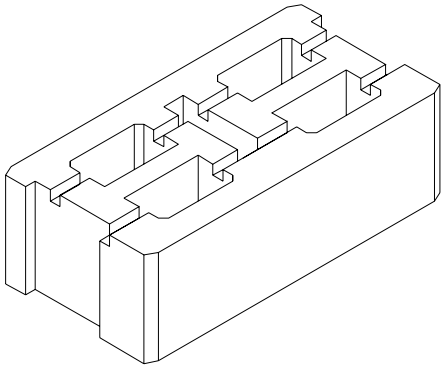

SBS30v (600x300x225) – for Russ. market

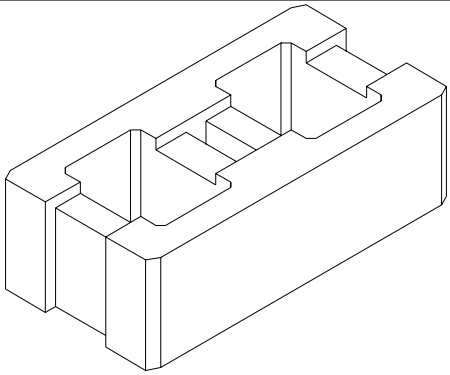

SBDS30v (600x300x225) –for Russ. market

ENCLOSURE 7.

DESIGN SYMBOLS OF SIMPROLIT BLOCKS AND THEIR THERMO-SOUND-PHYSICAL PROPERTIES

GENERAL SYMBOLS:

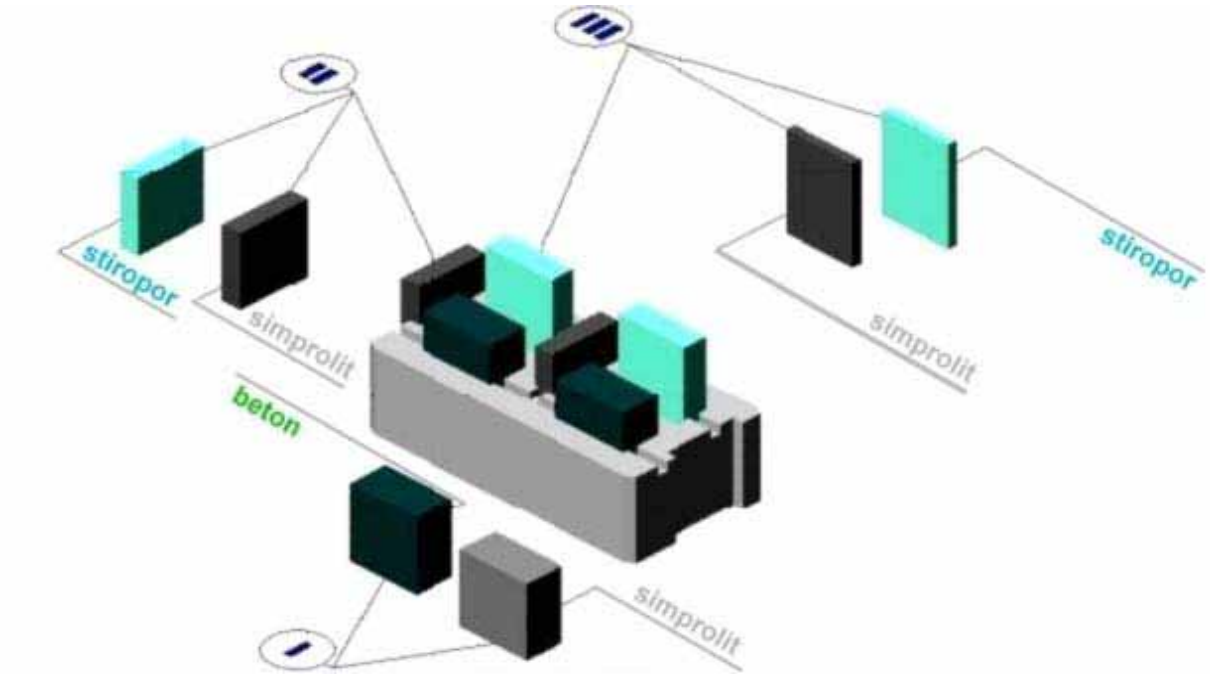

SIMPROLIT BLOCKS HAVE UNIFIED MARKING SYSTEM:

I. Filling of hollow longitudinal gaps, oriented towards the inside of the structure:
0 –without filling
B - concrete
C – Simprolit polystyrene concrete

II. Transversal thermo-insulation pads, in the middle of the blocks and sideways:
0 - without transversal thermo-insulation pads
P - longitudinal thermo-insulation pad made of polystyrene (styrofoam), its thickness depending on the type of the block
S - longitudinal thermo-insulation pad made of Simprolit one-layer (SOP) plate, its thickness depending on the type of the block

III. Longitudinal thermo-insulation pads, oriented towards the outside of the wall, their thickness (in cm) depending on thermic calculations:
0- without transversal thermo-insulation pads
P (1, 2.....) – longitudinal thermo-insulation pad made of polystyrene (styrofoam), thickness (1, 2..) cm
S (1, 2.....) – longitudinal thermo-insulation pad made of Simprolit one-layer (SOP) plate, thickness (1, 2.....) cm.

Example 1:
SB25 (B-0-P1) *symbolizing 25 cm thick Simprolit block (filled with concrete - without transversal thermo-insulation pads - with 1 cm thick longitudinal thermo-insulation pads made of polystyrene)*

Example 2:
SBS20 (B-S-P2) *symbolizing 20 cm thick type "S" Simprolit block (filled with concrete - with transversal thermo-insulation pads made of Simprolit one-layer (SOP) plate - with additional 2 cm thick longitudinal thermo-insulation pads made of polystyrene)*

SYMBOLS USED FOR THERMO-SOUND-PHYSICAL PROPERTIES OF SIMPROLIT BLOCKS

R_o [=] $м^2\,^oC/W$: Total heat transfer resistance coefficient for facade wall structure

R [=] $м^2\,^oC/W$: Heat transfer resistance coefficient for facade wall elements

$R_o^{тр}$ [=] $м^2\,^oC/W$: Required total heat transfer resistance coefficient for facade walls

$$R_o = R + 1/\alpha_B + 1/\alpha_H \geq R_o^{тр}$$

where:

α_i [=] $W/м^2\,^oC$ Heat transition coefficient on the inside surface of the facade wall

α_e [=] $W/м^2\,^oC$ Heat transition coefficient on the outside surface of the facade wall

K [=] $W/м^2\,^oC$: Heat transfer coefficient for particular elements of the wall

ΣK [=] $W/м^2\,^oC$: Total heat transfer coefficient for walls made of different elements

η [=]: Summer stability
(min. 10 - for walls facing north,
15 - for other walls,
25 - for roofs)

D_{24} [=] $W/(м^2\,^oC)$: Heat inertia coefficient

t_1 [=]°C (t_i inside temperature, t_e outside temperature) Comfortability

where:

t_i = Calculated temperature of the inside air
(according to the building design standards and technical norms)

t_e = Calculated temperature of the outside air
(according to the building design standards and technical norms)

R_w [=] dB: Sound insulation level of the facade wall

q [=] $kg/м^2$: Weight of the wall per m^2
(together with filling, insulation pads and double-sided plaster layer)

Remark: in the following review the coefficients related to certain block types are given:
without filling,
with smallest
and highest
heat transfer resistance.
Other variants are given in the special chapter "Civil engineering physics".

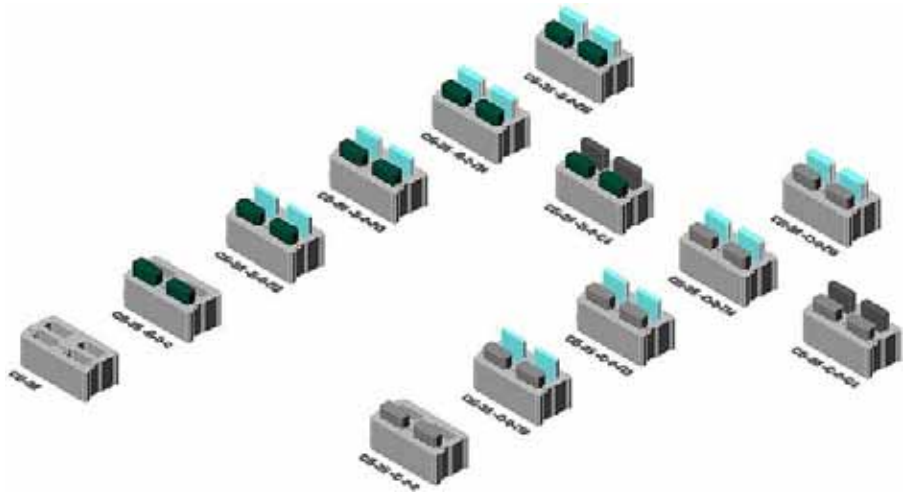

SB25

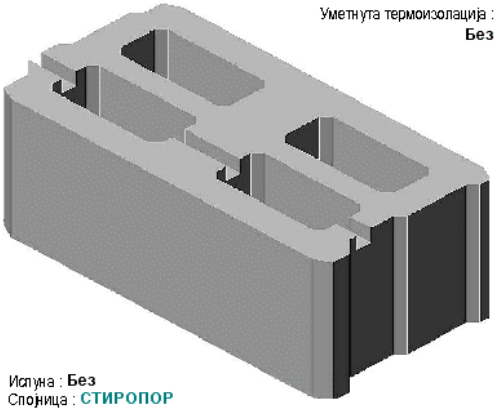

СБ-25 О-О-О

R = 2.6301 m^2K/W
K = 0.3802 W/m^2K
K^{Σ} = 0.3916 W/m^2K
ν = 36.69
D_{24} = 2.599 $W/(m^2K)$
t_1 =17.81°C (ti = 20°C / te = -26°C)
Rw = 49.89 dB
q = 87.08 kg/m^2

Термички еквивалент пуна опека 168 cm.
Термички еквивалент гитер опека 137 cm.

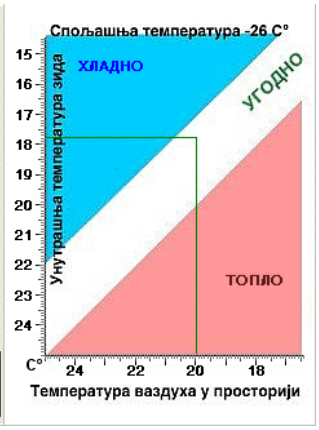

R_0 = R + 0,17 = 2.80

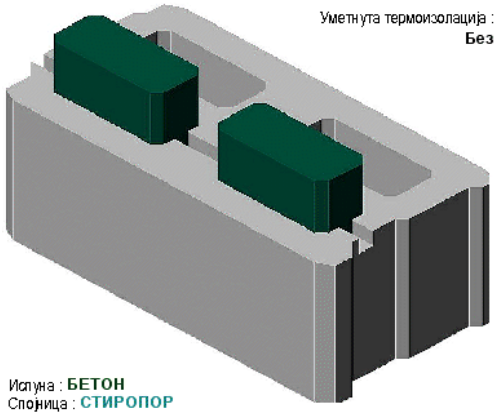

СБ-25 Б-О-О

R = 2.3766 m^2K/W
K = 0.4208 W/m^2K
K^{Σ} = 0.4334 W/m^2K
ν = 81.87
D_{24} = 3.124 $W/(m^2K)$
t_1 =17.58°C (ti = 20°C / te = -26°C)
Rw = 54.44 dB
q = 184.01 kg/m^2

Термички еквивалент пуна опека 152 cm.
Термички еквивалент гитер опека 124 cm.

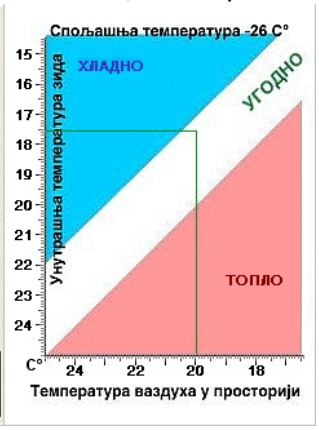

R_0 = R + 0,17 = 2.55

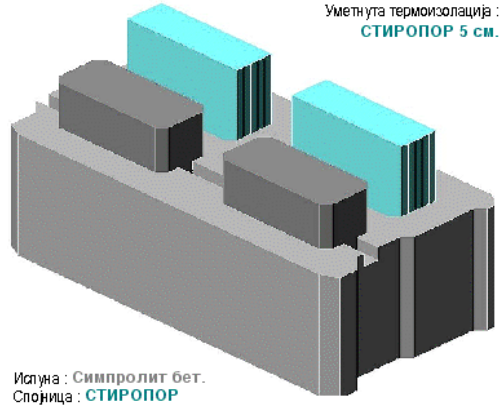

СБ-25 С-О-П5

R = 3.8947 m^2K/W
K = 0.2568 W/m^2K
K^{Σ} = 0.2645 W/m^2K
ν = 91.63
D_{24} = 3.547 $W/(m^2K)$
t_1 =18.52°C (ti = 20°C / te = -26°C)
Rw = 45.13 dB
q = 100.63 kg/m^2

Термички еквивалент пуна опека 249 cm.
Термички еквивалент гитер опека 203 cm.

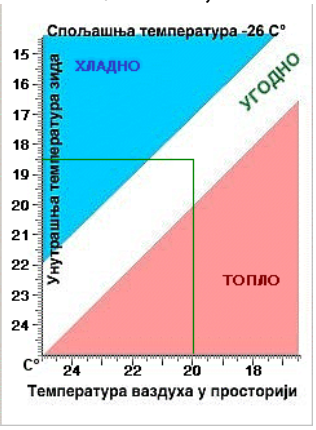

R_0 = R + 0,17 = 4.07

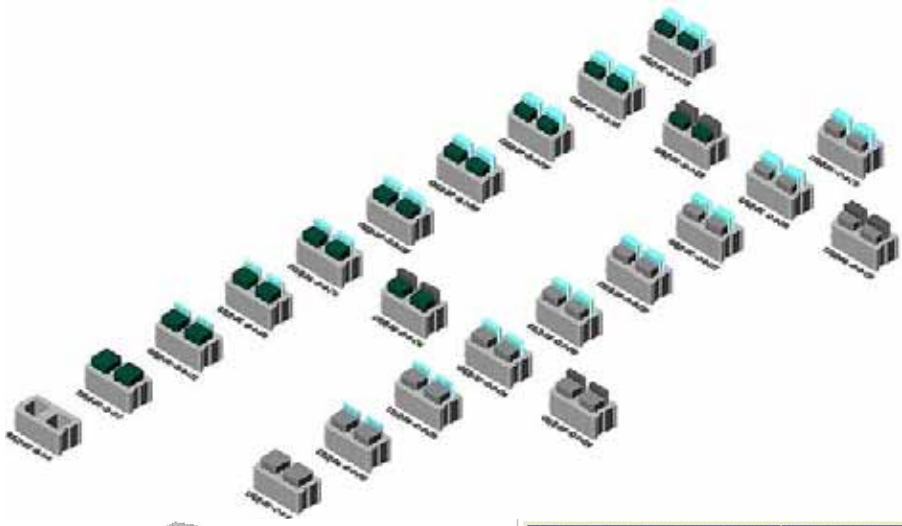

SBD25

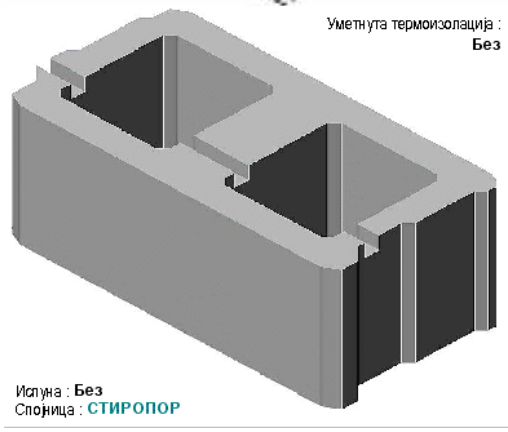

СБД-25 | О-О-О

R = 1.9095 m^2K/W
K = 0.5237 W/m^2K
K^{Σ} = 0.5394 W/m^2K
ν = 41.90
D_{24} = 2.231 $W/(m^2K)$
t_1 =16.99°C (ti = 20°C / te = -26°C)
Rw = 51.78 dB
q = 81.95 kg/m^2

Термички еквивалент пуна опека 122 cm.
Термички еквивалент гитер опека 99 cm.

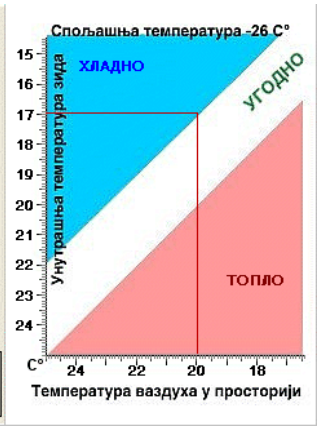

R_0 = R + 0,17 = 2.08

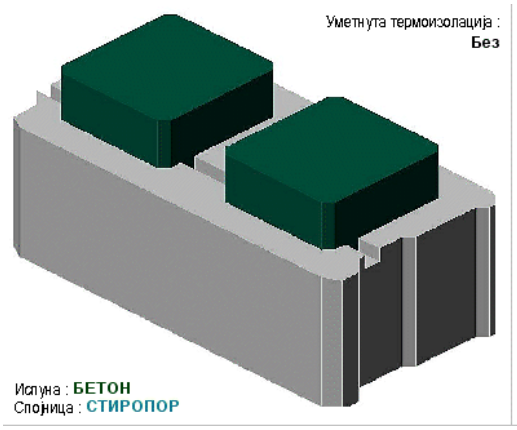

СБД-25 | Б-О-О

R = 1.7024 m^2K/W
K = 0.5874 W/m^2K
K^{Σ} = 0.6050 W/m^2K
ν = 99.51
D_{24} = 3.515 $W/(m^2K)$
t_1 =16.62°C (ti = 20°C / te = -26°C)
Rw = 53.85 dB
q = 316.75 kg/m^2

Термички еквивалент пуна опека 109 cm.
Термички еквивалент гитер опека 89 cm.

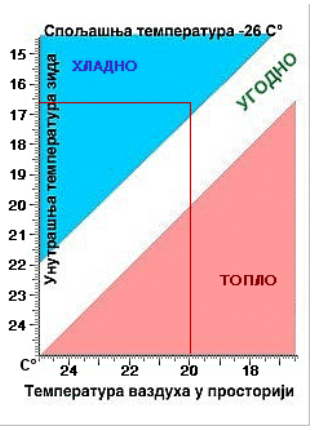

R_0 = R + 0,17 = 1.87

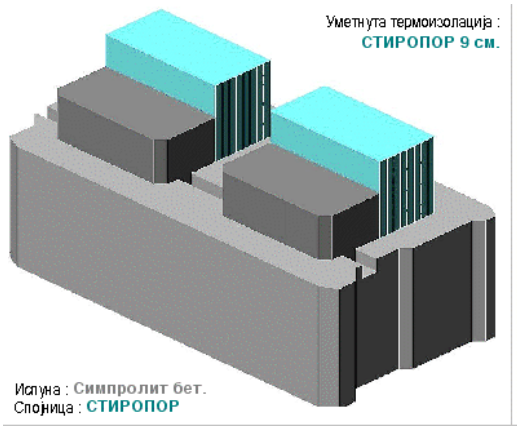

СБД-25 | С-О-П9

R = 4.1439 m^2K/W
K = 0.2413 W/m^2K
K^{Σ} = 0.2486 W/m^2K
ν = 98.18
D_{24} = 3.396 $W/(m^2K)$
t_1 =18.62°C (ti = 20°C / te = -26°C)
Rw = 45.80 dB
q = 96.09 kg/m^2

Термички еквивалент пуна опека 265 cm.
Термички еквивалент гитер опека 215 cm.

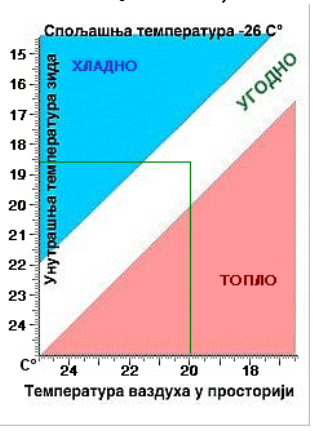

R_0 = R + 0,17 = 4.31

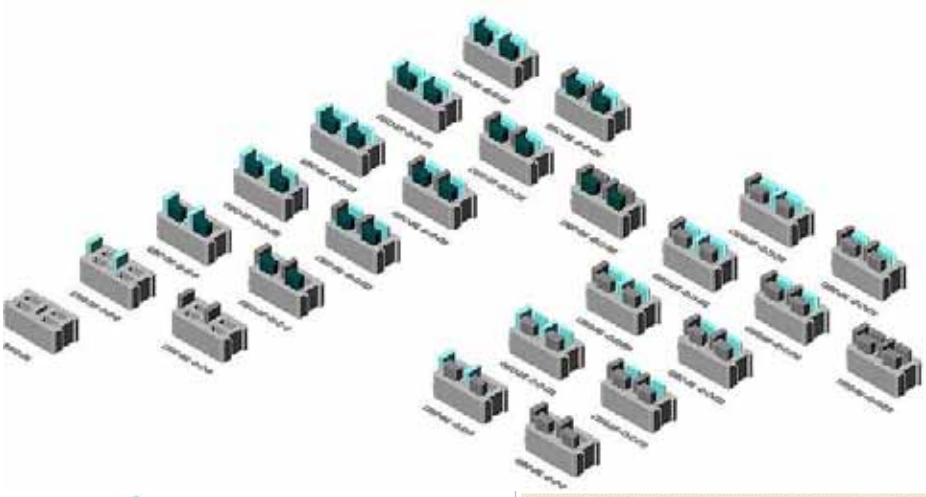

SBS25

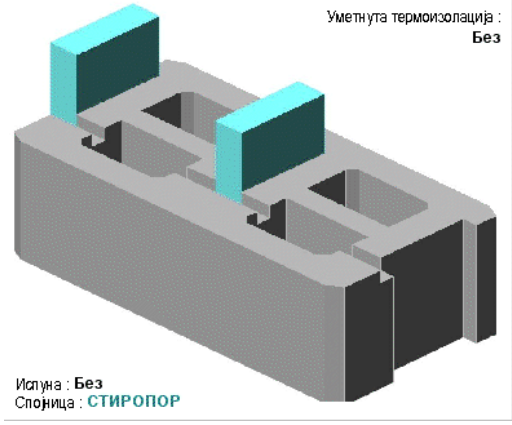

СБС-25 О-П-О

R = 2.8952 m^2K/W
K = 0.3454 W/m^2K
K^{Σ} = 0.3558 W/m^2K
ν = 61.33
D_{24} = 2.832 $W/(m^2K)$
t_1 =18.01°C (ti = 20°C / te = -26°C)
Rw = 48.27 dB
q = 90.96 kg/m^2

Термички еквивалент пуна опека 185 cm.
Термички еквивалент гитер опека 151 cm.

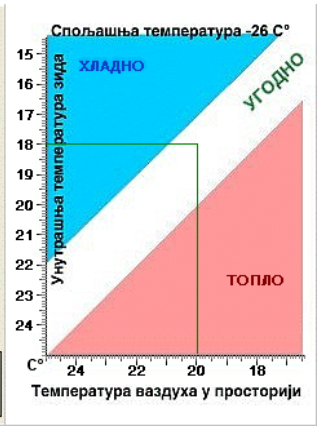

R_0 = R + 0,17 = 3.07

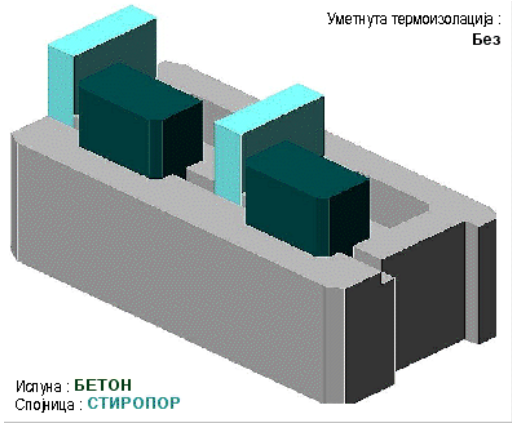

СБС-25 Б-П-О

R = 2.6689 m^2K/W
K = 0.3747 W/m^2K
K^{Σ} = 0.3859 W/m^2K
ν = 124.4
D_{24} = 3.212 $W/(m^2K)$
t_1 =17.84°C (ti = 20°C / te = -26°C)
Rw = 51.56 dB
q = 161.03 kg/m^2

Термички еквивалент пуна опека 171 cm.
Термички еквивалент гитер опека 139 cm.

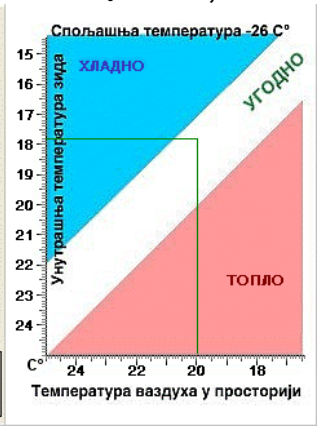

R_0 = R + 0,17 = 2.84

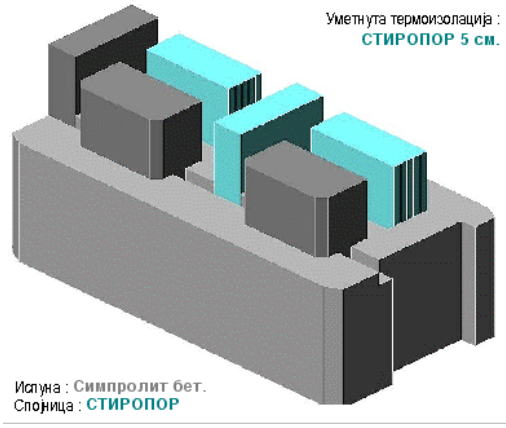

СБС-25 С-П-П5

R = 3.9191 m^2K/W
K = 0.2552 W/m^2K
K^{Σ} = 0.2628 W/m^2K
ν = 98.41
D_{24} = 3.537 $W/(m^2K)$
t_1 =18.53°C (ti = 20°C / te = -26°C)
Rw = 44.82 dB
q = 100.37 kg/m^2

Термички еквивалент пуна опека 251 cm.
Термички еквивалент гитер опека 204 cm.

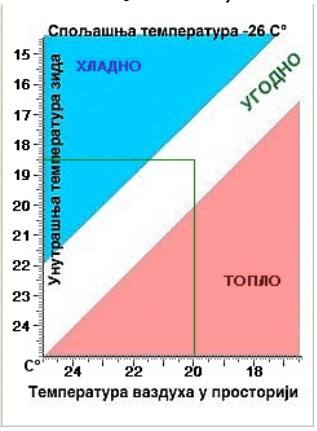

R_0 = R + 0,17 = 4.09

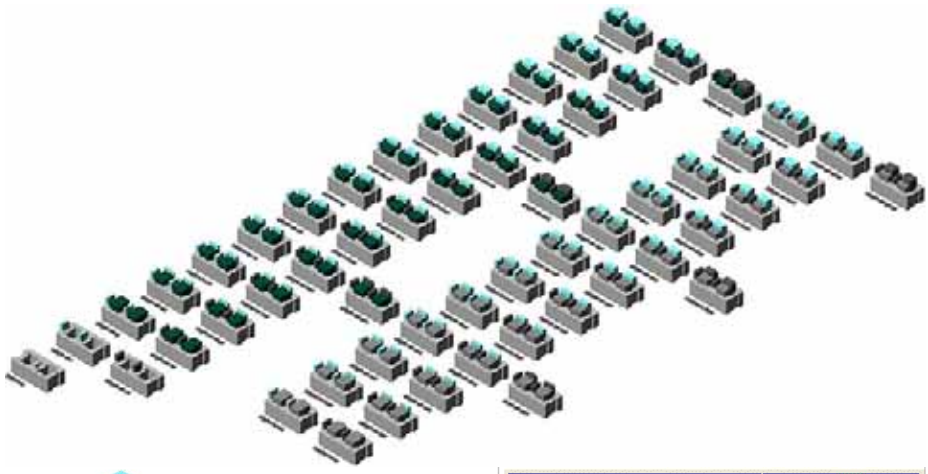

SBDS25

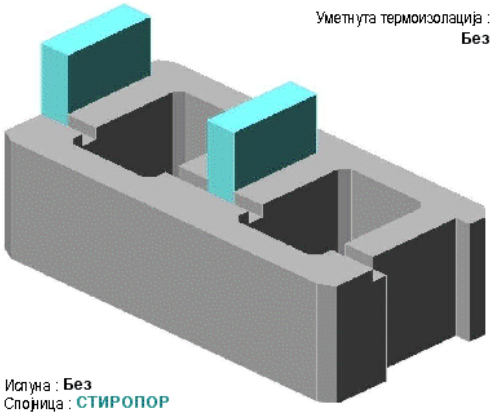

СБДС-25 О-П-О

R = 2.2417 m^2K/W
K = 0.4461 W/m^2K
K^{Σ} = 0.4595 W/m^2K
ν = 39.51
D_{24} = 2.541 $W/(m^2K)$
t_1 =17.43°C (ti = 20°C / te = -26°C)
Rw = 48.01 dB
q = 85.66 kg/m^2

Термички еквивалент пуна опека 143 cm.
Термички еквивалент гитер опека 117 cm.

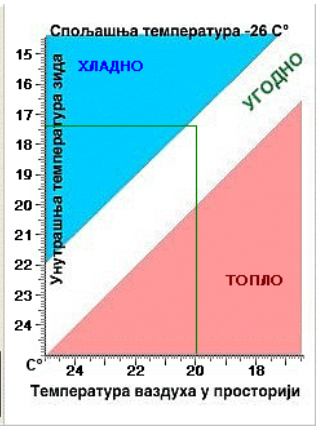

R_0 = R + 0,17 = 2.41

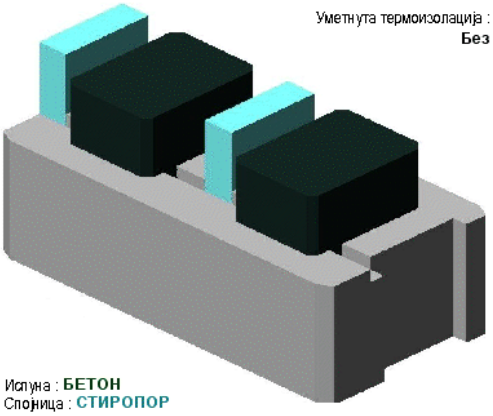

СБДС-25 Б-П-О

R = 2.0302 m^2K/W
K = 0.4926 W/m^2K
K^{Σ} = 0.5073 W/m^2K
ν = 81.48
D_{24} = 3.472 $W/(m^2K)$
t_1 =17.17°C (ti = 20°C / te = -26°C)
Rw = 50.18 dB
q = 256.18 kg/m^2

Термички еквивалент пуна опека 130 cm.
Термички еквивалент гитер опека 106 cm.

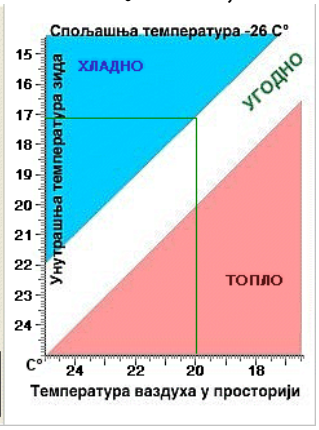

R_0 = R + 0,17 = 2.20

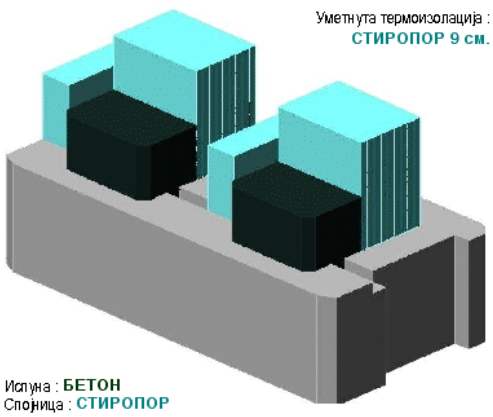

СБДС-25 Б-П-П9

R = 4.1414 m^2K/W
K = 0.2415 W/m^2K
K^{Σ} = 0.2487 W/m^2K
ν = 67.63
D_{24} = 3.344 $W/(m^2K)$
t_1 =18.61°C (ti = 20°C / te = -26°C)
Rw = 47.01 dB
q = 96.90 kg/m^2

Термички еквивалент пуна опека 265 cm.
Термички еквивалент гитер опека 215 cm.

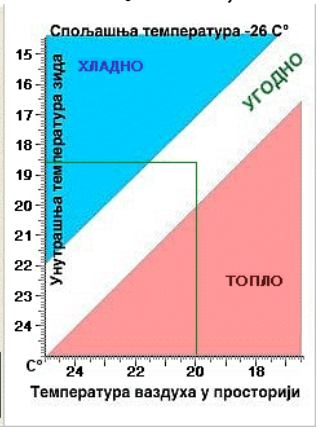

R_0 = R + 0,17 = 4.31

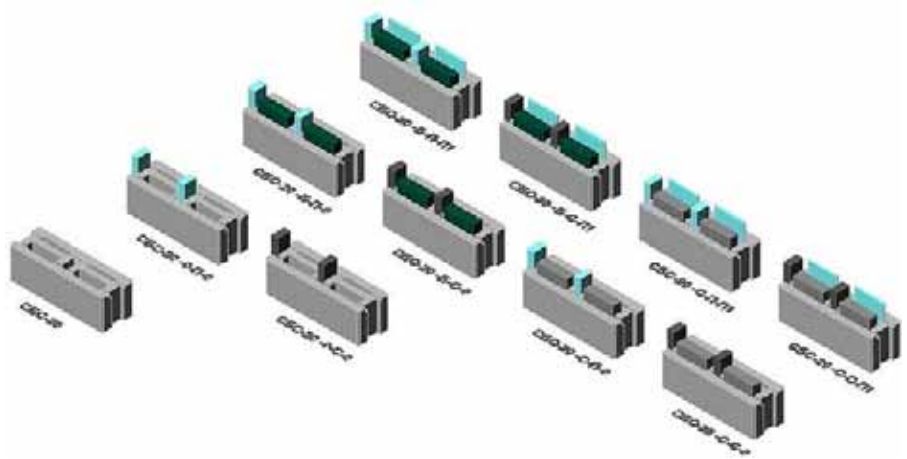

SBS20

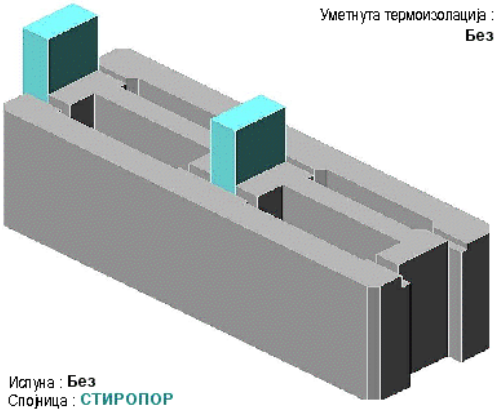

СБС-20 О-П-О

R = 2.5595 m^2K/W
K = 0.3907 W/m^2K
K^{Σ} = 0.4024 W/m^2K
ν = 30.01
D_{24} = 2.330 $W/(m^2K)$
t_1 =18.14°C (ti = 20°C / te = -26°C)
Rw = 48.83 dB
q = 83.45 kg/m^2

Термички еквивалент пуна опека 164 cm.
Термички еквивалент гитер опека 133 cm.

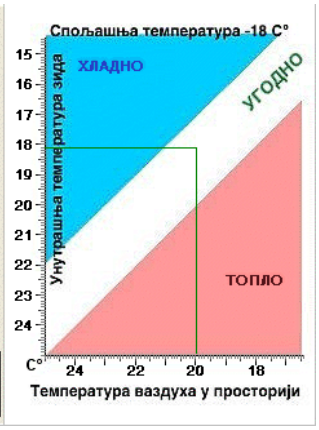

R_0 = R + 0,17 = 2.73

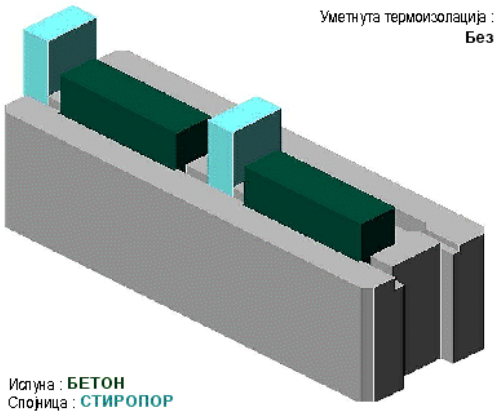

СБС-20 Б-П-О

R = 2.3245 m^2K/W
K = 0.4302 W/m^2K
K^{Σ} = 0.4431 W/m^2K
ν = 64.68
D_{24} = 2.742 $W/(m^2K)$
t_1 =17.95°C (ti = 20°C / te = -26°C)
Rw = 50.61 dB
q = 159.49 kg/m^2

Термички еквивалент пуна опека 149 cm.
Термички еквивалент гитер опека 121 cm.

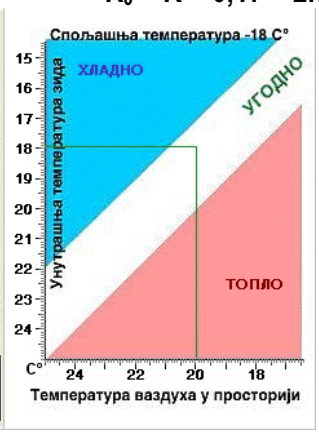

R_0 = R + 0,17 = 2.49

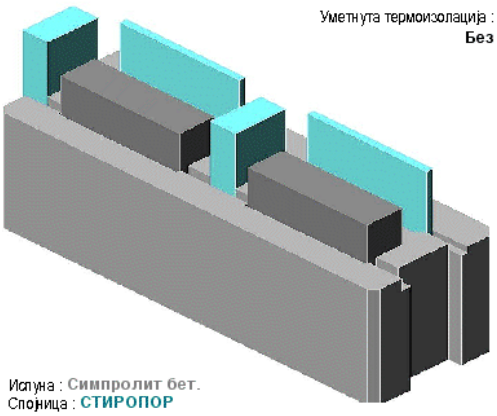

СБС-20 С-П-П1

R = 3.0881 m^2K/W
K = 0.3238 W/m^2K
K^{Σ} = 0.3335 W/m^2K
ν = 132.8
D_{24} = 2.957 $W/(m^2K)$
t_1 =18.46°C (ti = 20°C / te = -26°C)
Rw = 44.25 dB
q = 93.48 kg/m^2

Термички еквивалент пуна опека 198 cm.
Термички еквивалент гитер опека 161 cm.

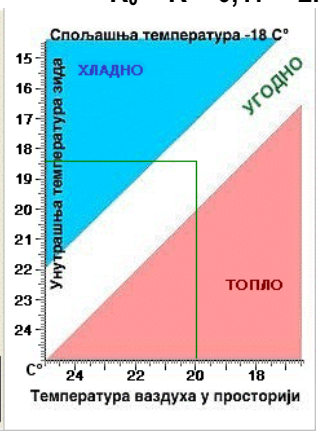

R_0 = R + 0,17 = 3.26

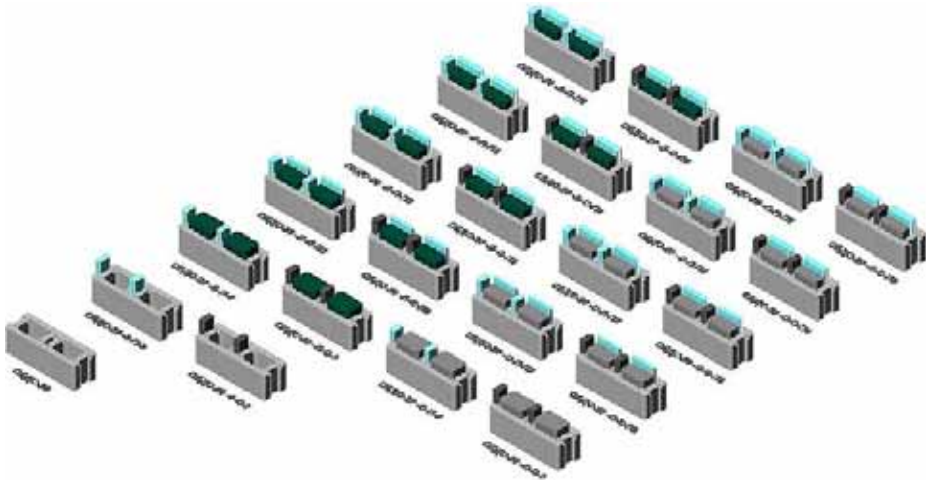

SBDS20

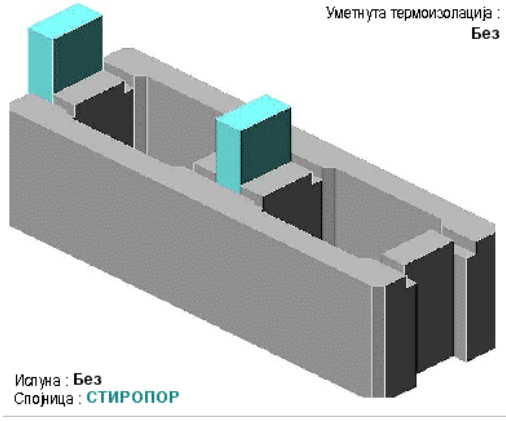

СБДС-20 О-П-О

R = 1.8086 m^2K/W
K = 0.5529 W/m^2K
K^{Σ} = 0.5695 W/m^2K
ν = 22.21
D_{24} = 1.936 $W/(m^2K)$
t_1 =17.38°C (ti = 20°C / te = -26°C)
Rw = 48.74 dB
q = 77.05 kg/m^2

Термички еквивалент пуна опека 116 cm.
Термички еквивалент гитер опека 94 cm.

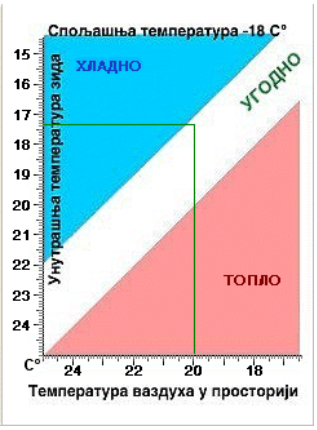

R_0 = R + 0,17 = 2.73

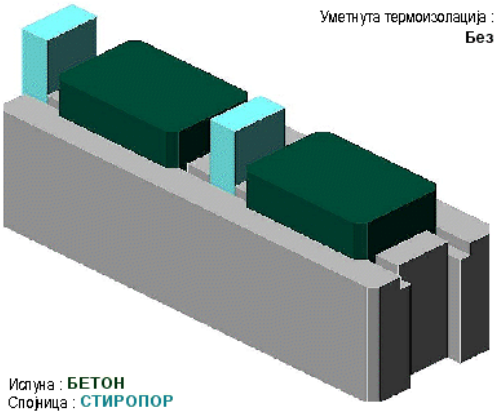

СБДС-20 Б-П-О

R = 1.5646 m^2K/W
K = 0.6391 W/m^2K
K^{Σ} = 0.6583 W/m^2K
ν = 51.34
D_{24} = 2.837 $W/(m^2K)$
t_1 =16.96°C (ti = 20°C / te = -26°C)
Rw = 50.03 dB
q = 242.73 kg/m^2

Термички еквивалент пуна опека 100 cm.
Термички еквивалент гитер опека 81 cm.

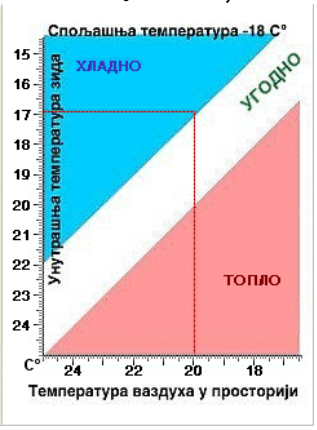

R_0 = R + 0,17 = 2.49

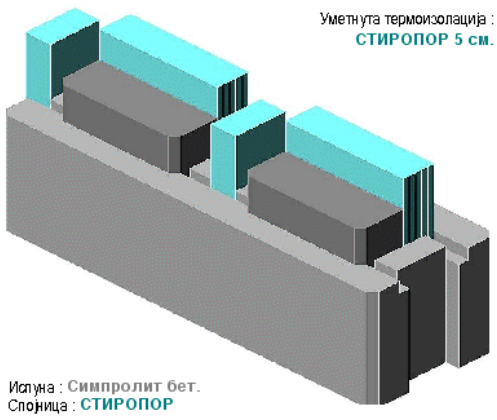

СБДС-20 С-П-П5

R = 3.3076 m^2K/W
K = 0.3023 W/m^2K
K^{Σ} = 0.3114 W/m^2K
ν = 44.88
D_{24} = 2.863 $W/(m^2K)$
t_1 =18.56°C (ti = 20°C / te = -26°C)
Rw = 43.71 dB
q = 89.90 kg/m^2

Термички еквивалент пуна опека 212 cm.
Термички еквивалент гитер опека 172 cm.

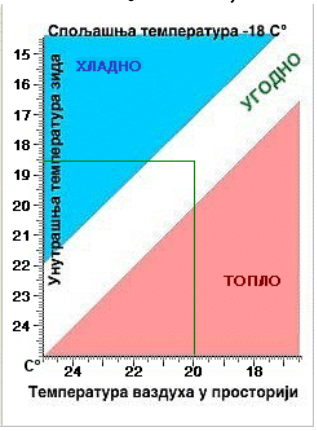

R_0 = R + 0,17 = 3.48

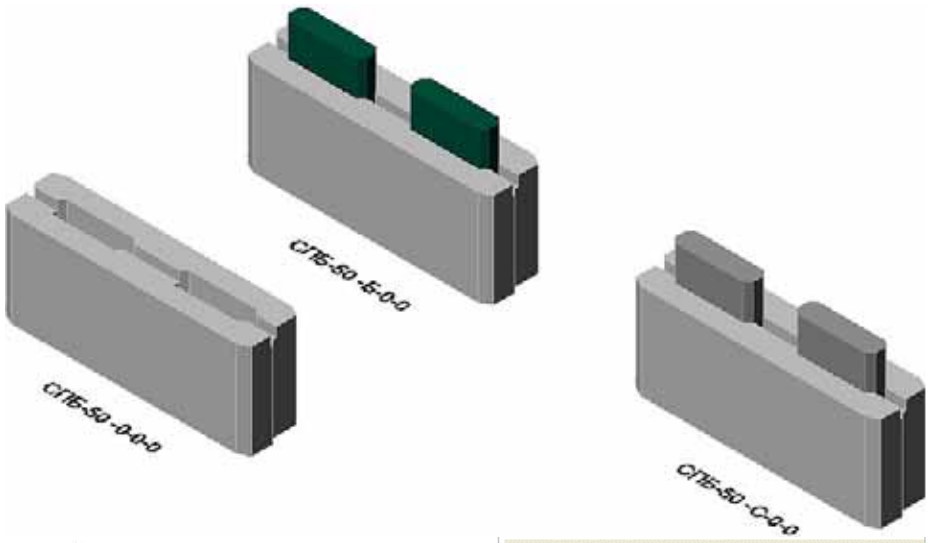

SPB50

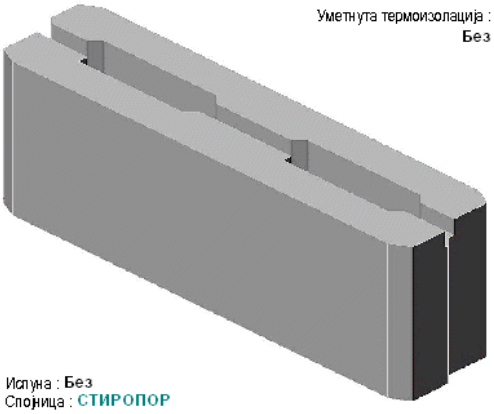

СПБ-50 | 0-0-0

R = 1.6243 m^2K/W
K = 0.6156 W/m^2K
K^{Σ} = 0.6341 W/m^2K
ν = 12.20
D_{24} = 1.466 $W/(m^2K)$
t_1 =18.08°C (ti = 20°C / te = -26°C)
Rw = 39.69 dB
q = 39.92 kg/m^2

Термички еквивалент пуна опека 104 cm.
Термички еквивалент гитер опека 84 cm.

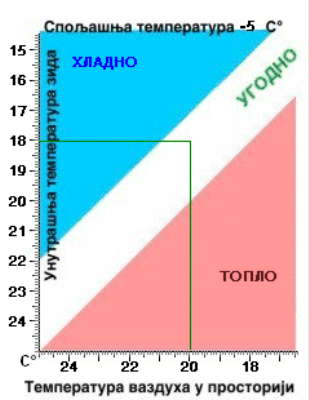

R_0 = R + 0,17 = 1.79

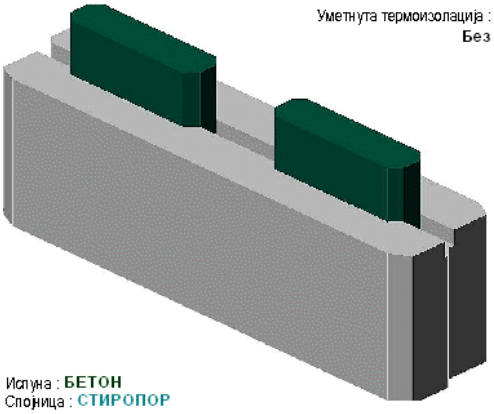

СПБ-50 | Б-0-0

R = 1.4067 m^2K/W
K = 0.7109 W/m^2K
K^{Σ} = 0.7322 W/m^2K
ν = 24.00
D_{24} = 1.726 $W/(m^2K)$
t_1 =17.78°C (ti = 20°C / te = -26°C)
Rw = 42.67 dB
q = 87.34 kg/m^2

Термички еквивалент пуна опека 90 cm.
Термички еквивалент гитер опека 73 cm.

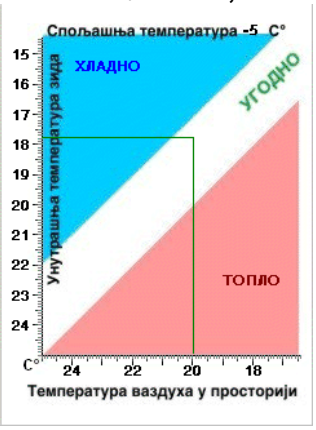

R_0 = R + 0,17 = 1.57

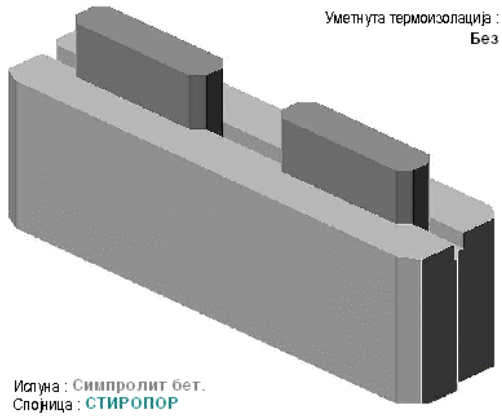

СПБ-50 | С-0-0

R = 1.7128 m^2K/W
K = 0.5838 W/m^2K
K^{Σ} = 0.6014 W/m^2K
ν = 14.30
D_{24} = 1.832 $W/(m^2K)$
t_1 =18.18°C (ti = 20°C / te = -26°C)
Rw = 39.17 dB
q = 46.35 kg/m^2

Термички еквивалент пуна опека 110 cm.
Термички еквивалент гитер опека 89 cm.

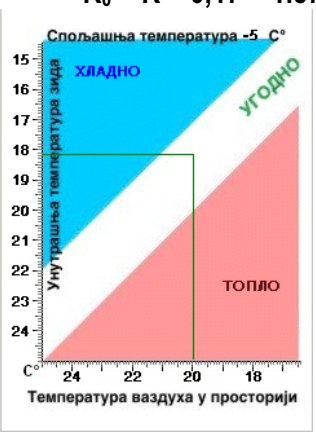

R_0 = R + 0,17 = 1.88

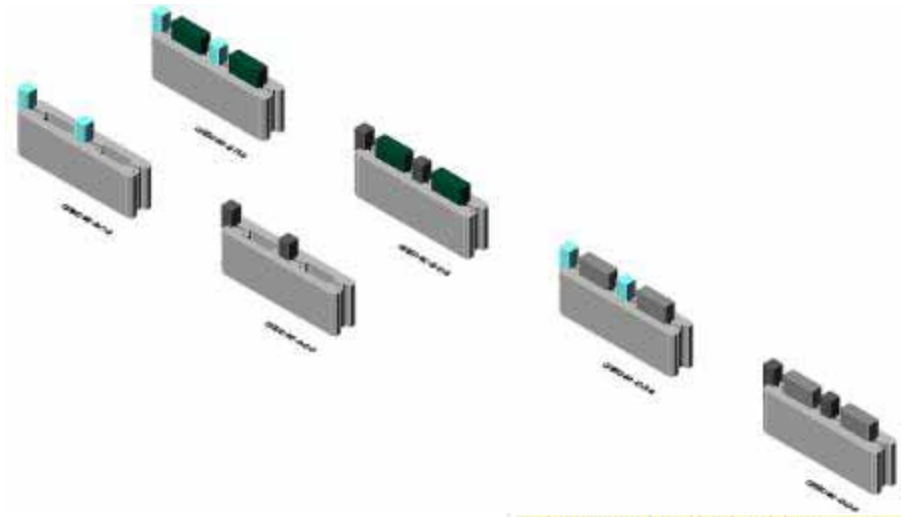

SPBS60

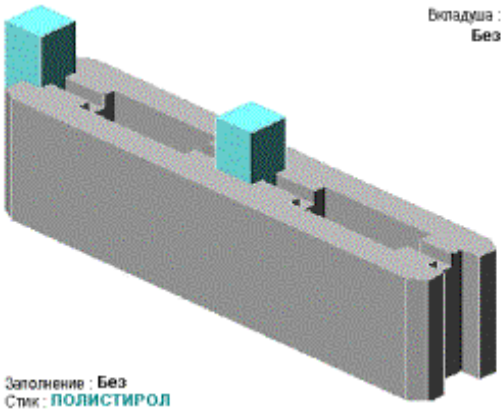

СПБС-60 О-П-О

R = 1.7650 m²K/W
K = 0.5666 W/m²K
K^{Σ} = 0.5836 W/m²K
ν = 14.80
D_{24} = 1.408 W/(m²K)
t_1 =18.25°C (ti = 20°C / te = -5°C)
Rw = 39.18 dB
q = 38.27 kg/m²

Тепл. эквив. полнотелого кирпича 113 cm.
Тепл. эквив. пустотелого кирпича 92 cm.

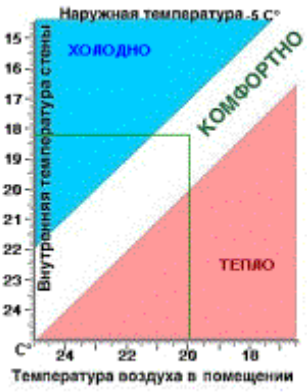

R_0 = R + 0,17 = 1.94

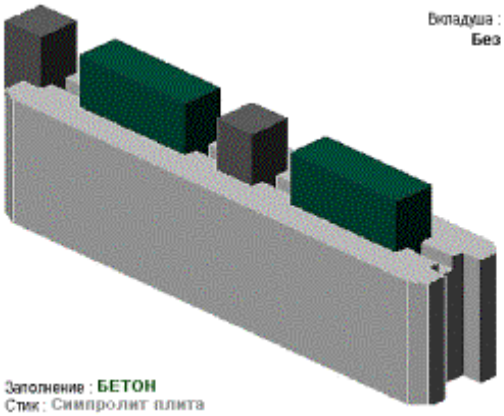

СПБС-60 Б-С-О

R = 1.4895 m²K/W
K = 0.6713 W/m²K
K^{Σ} = 0.6915 W/m²K
ν = 13.64
D_{24} = 1.752 W/(m²K)
t_1 =17.89°C (ti = 20°C / te = -5°C)
Rw = 43.03 dB
q = 90.15 kg/m²

Тепл. эквив. полнотелого кирпича 95 cm.
Тепл. эквив. пустотелого кирпича 77 cm.

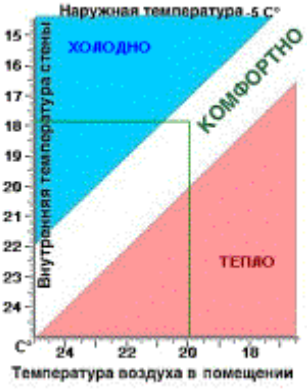

R_0 = R + 0,17 = 1.66

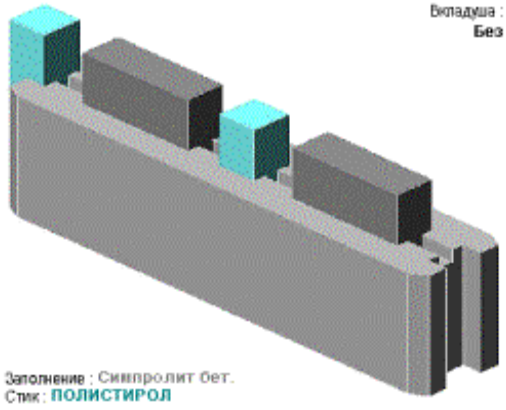

СПБС-60 С-П-О

R = 1.9226 m²K/W
K = 0.5201 W/m²K
K^{Σ} = 0.5357 W/m²K
ν = 7.27
D_{24} = 1.797 W/(m²K)
t_1 =18.37°C (ti = 20°C / te = -5°C)
Rw = 38.90 dB
q = 44.95 kg/m²

Тепл. эквив. полнотелого кирпича 123 cm.
Тепл. эквив. пустотелого кирпича 100 cm.

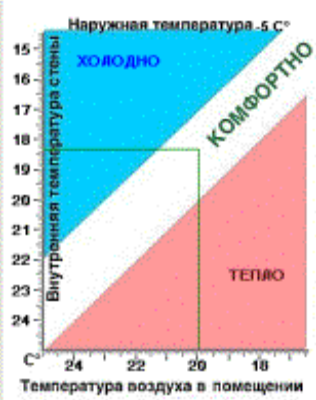

R_0 = R + 0,17 = 2.09

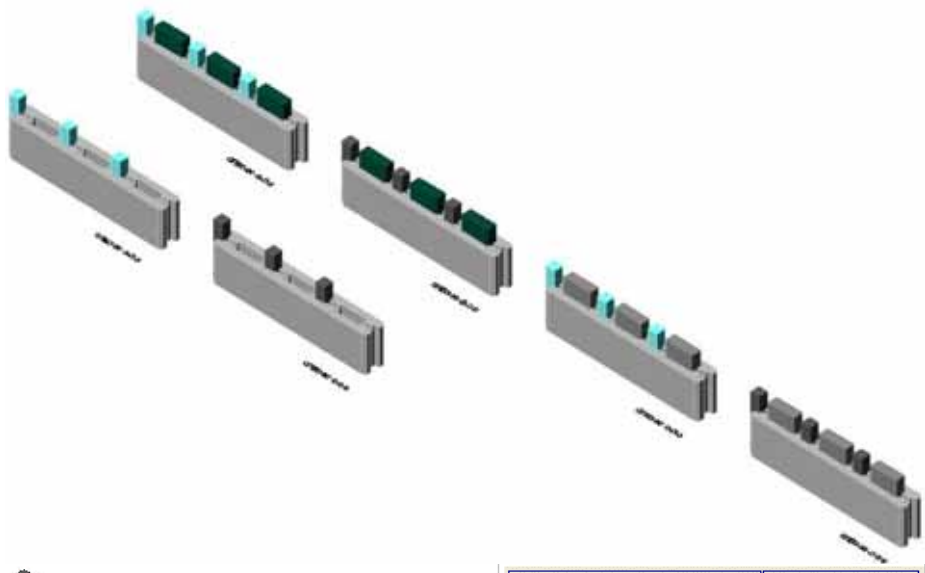

SPBS90

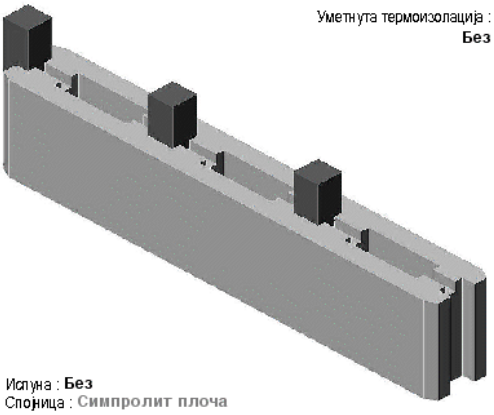

СПБС-90 О-С-О

R = 1.5633 m^2K/W
K = 0.6397 W/m^2K
K^{Σ} = 0.6589 W/m^2K
ν = 12.24
D_{24} = 1.464 $W/(m^2K)$
t_1 =17.44°C (ti = 20°C / te = -12°C)
Rw = 39.64 dB
q = 39.65 kg/m^2

Термички еквивалент пуна опека 100 cm.
Термички еквивалент гитер опека 81 cm.

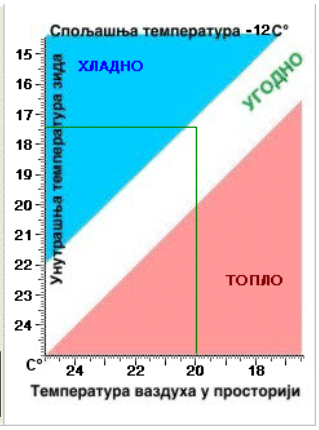

R_0 = R + 0,17 = 1.73

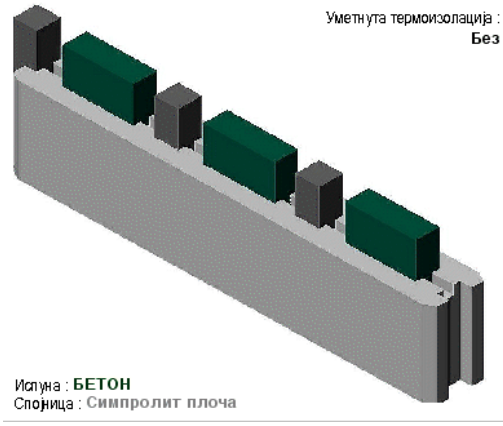

СПБС-90 Б-С-О

R = 1.3622 m^2K/W
K = 0.7341 W/m^2K
K^{Σ} = 0.7561 W/m^2K
ν = 23.55
D_{24} = 1.734 $W/(m^2K)$
t_1 =17.06°C (ti = 20°C / te = -12°C)
Rw = 42.57 dB
q = 89.71 kg/m^2

Термички еквивалент пуна опека 87 cm.
Термички еквивалент гитер опека 71 cm.

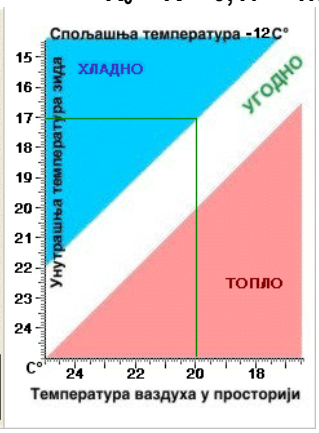

R_0 = R + 0,17 = 1.53

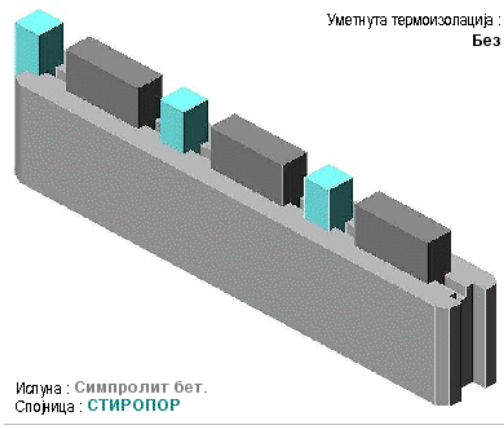

СПБС-90 С-П-О

R = 1.7872 m^2K/W
K = 0.5595 W/m^2K
K^{Σ} = 0.5763 W/m^2K
ν = 14.30
D_{24} = 1.780 $W/(m^2K)$
t_1 =17.76°C (ti = 20°C / te = -12°C)
Rw = 38.94 dB
q = 44.57 kg/m^2

Термички еквивалент пуна опека 114 cm.
Термички еквивалент гитер опека 93 cm.

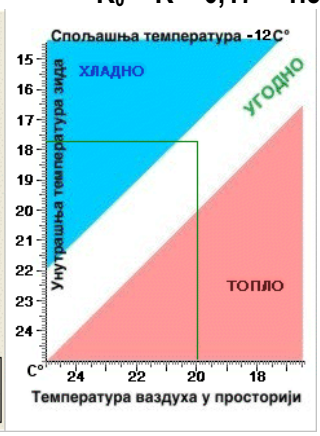

R_0 = R + 0,17 = 1.96

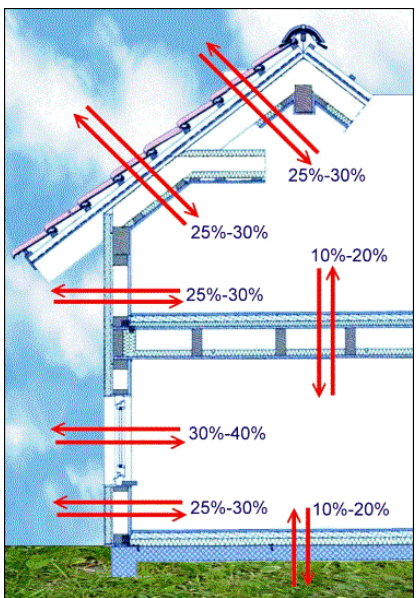

HEAT LOSS STRUCTURE
ACCORDING TO EUROPEAN STANDARDS

HEAT LOSS STRUCTURE
ACCORDING TO RUSSIAN STANDARDS

ENCLOSURE 9.

СИСТЕМА СЕРТИФИКАЦИИ В ОБЛАСТИ ПОЖАРНОЙ БЕЗОПАСНОСТИ

СЕРТИФИКАТ ПОЖАРНОЙ БЕЗОПАСНОСТИ

СИСТЕМА СЕРТИФИКАЦИИ В ОБЛАСТИ ПОЖАРНОЙ БЕЗОПАСНОСТИ

СЕРТИФИКАТ ПОЖАРНОЙ БЕЗОПАСНОСТИ

СИСТЕМА СЕРТИФИКАЦИИ В ОБЛАСТИ ПОЖАРНОЙ БЕЗОПАСНОСТИ

СЕРТИФИКАТ ПОЖАРНОЙ БЕЗОПАСНОСТИ

Система сертификации СовАсК

СЕРТИФИКАТ СООТВЕТСТВИЯ

МИНИСТЕРСТВО ЗДРАВООХРАНЕНИЯ РОССИЙСКОЙ ФЕДЕРАЦИИ

Гигиеническое заключение на продукцию, товар

Гигиеническая характеристика продукции

Научно-Исследовательский Институт Строительной Физики (НИИСФ)

ИСПЫТАТЕЛЬНАЯ ЛАБОРАТОРИЯ

ПРОТОКОЛ ИСПЫТАНИЙ № 191

ENCLOSURE 10.